SCAN TO VERIFY
LAW DEPARTMENT
GOVERNMENT OF SINDH
www.sindhlaws.gov.pk

THE SINDH GOVERNMENT GAZETTE

The Sindh Government Gazette

PUBLISHED BY AUTHORITY

KARACHI, THURSDAY, JUNE 17, 1976

PART IV-A

GOVERNMENT OF SIND

LABOUR DEPARTMENT

NOTIFICATION

Karachi, the 17th June, 1976

NO, SO(L-II)-2-27/75,-With reference to the Government of Sind, Labour Department Notification No. SO(L-II)-2-27/75. Dated the 20th May, 1976, published in the Sindh Government Gazette, Part IV-A, extraordinary issue, dated the 11th May, 1976, the Government of Sind in exercise of the powers conferred by section 47 of the Sindh Standard Weights and Measures Enforcement Act, 1975 (Sind Act XX of 1975). Are pleased to make the following rules:-

1. Short title,-These rules may called the Sind Standard Weights and Measures Enforcement Rules 1976.

2. Definition,-(1) In these rules, unless there is anything repugnant in the subject or context:-

   (a) "Act" means the Sind Standard Weights and Measures Enforcement Act, 1975:

   (b) "capacity" with reference to a weighing instrument means the maximum load for which it is constructed to weigh:

   (c) "correct" means correct within the limits of error specified in these Rules:

   (d) "error" means deficiency in weight or measure and with reference to a weighing instrument includes deficiency in sensitiveness;

   (e) "form" means a form appended to these Rules;

   (f) "National Physical Laboratory" means the Laboratory established by the Government of Pakistan;

(g) “pre-packed article” means any article sold by weight or measure which is packed or made up ready in advance for retail sale in wrapper or container;

(h) “Schedule” means a schedule appended to these rules.

3. Working Standards,-(1) The Working Standards shall conform, as regards, denomination, material used in construction and design, to the specification laid down in Schedule-I.

(2) A set of working Standards shall be kept and maintained in the custody of the Inspector of the area concerned at such place and in such manner as the Controller may direct; and the Inspector shall maintain such standard in good and clean working condition so that their accuracy cannot be tampered with.

(3) The working standards shall be verified with the secondary standards at least once a year by the Controller or any other officer authorized by the Controller and if found correct, shall be stamped. If the working standards on verification are found to be incorrect, they shall be adjusted or renewed and stamped.

(4) Limits of error which may be tolerated on the verification shall be as specified in Schedule-I.

(5) The working standard shall be authenticated by any Officer authorized by the Controller before these are put to Actual use.

4. Secondary Standards,-(1) The secondary standards shall conform-as regards denomination, material used in construction and design, to the specification laid down in Schedule-II.

(2) The sets of secondary standards shall be kept at such places, in such custody and in such manner the Controller may direct.

(3) The secondary standards shall be verified with the reference standards kept at the national physical laboratory atleast once in every five years and if found correct, shall be stamped. If the Secondary standards on verification are found to be incorrect, they shall be adjusted or renewed and stamped.

(4) The limits of error which may be tolerated in the Secondary standards on verification shall be as specified in Schedule-II

(5) The secondary standards shall be authenticated by National Physical Laboratory before they are put to Actual use.

5. Standard weighing instruments,-(1) A set of working standard balances for the purpose of verifying the correctness or commercial weights shall be kept with every officer with whom working standards are kept.

(2) The number, types and specifications, of such balances shall be as laid down in Schedule-IV.

(3) The Controller or any other officer authorized by the Controller shall, atleast once in a year, verify such balances ensuring their correctness within the limits or sensitiveness which if found correct shall be stamped. If such balances are found incorrect they shall be adjusted accordingly and stamped.

(4) A set of secondary standard balances shall b kept and maintained at every place where the secondary standards are kept.

(5) The number, types and specifications of such balances shall be as laid down in Schedule-III.

(6) The secondary standard balance shall be verified with the reference standards kept at the National Physical Laboratory atleast once in five years ensuring their correctness within the limits of sensitiveness and if found correct shall be stamped. If the secondary standard balances are found incorrect they shall be adjusted accordingly and stamped.

6. Commercial Weights and Measures.-All commercial weights, measures of length and measures of capacity shall conform as regards de-nomination, material used in preparation, construction and design, to the specification laid down Schedule-V.

7. Commercial weighing and Measuring Instruments.-(1) All weighing instruments and measuring instruments used or intended to be used in transactions of trade and commerce shall conform as regards capacity, material and design to the specifications laid down in Schedule-VI.

(2) The limits of error which may be tolerated in such weighing and measuring instruments at the time of verification and inspection shall be as specified in Schedule-VI.

(3) A Beam scale used in transaction of trade and commerce shall be suspended to a stand or to a chain by a book.

Provided that this sub-rule shall not apply to hawkers and persons other than shop-keepers.

(4) (1) Weighing instruments used by the different classes of traders shall be as follows:-

(i) Chemists, Druggists and Pharmaceuticals concern (Laboratories).	Beam Scales of Class 'A' or Class 'B'.
(ii) Gold Silver Merchant, Jewelers and Bullion dealers, dealer in precious metals And precious stones.	Beam Scales of Class 'A' or Class 'B'
(iii) Retailer and whole sellers in Tea, Coffee, Tobacco and Cotton spices, Ghee, Butter.	Other than Classes A, B, and D, Beam Scales.
(iv) Retailer and whole sale dealers in live Poultry.	Other than Beam Scales of Classes A and B and spring Balances.
(v) Any other class of traders.	As the Controller May specify.

8. *Periodical verification of commercial weight and measures* - (1) All weights, measures, weighing instruments and measuring instrument used or intended to be used in transaction of trade and commerce or, by a bullion and precious stones, or by the Railway administration, or by a Factory, within the meaning of Factories Act, 1934 (XXV of 1934) or by the Food Department or used or intended to be used in connection with the collection of tools and duties shall be verified and stamped in accordance with the provision of the Act and these Rules atleast once in every twelve months.

(2) All weigh bridges, platform machines, and such other weighing and measuring instruments as the Controller may specify in this behalf, shall be verified

and stamped in accordance with the provision of the Act and these rules atleast once in every twelve months.

(3) All Petrol Pumps shall be verified and stamped in accordance with the provision of the Act and these rules atleast once in every twelve months.

(4) The Tanks of all tanker lorries shall be verified and stamped in accordance with the provision of the Act and these rules atleast once in every twelve months.

(5) All weights, measures, weighing instruments and measuring instruments used or intended to be used in transaction of trade and commerce, other than those specified in sub-rules (1), (2) and (3) shall be verified and stamped in accordance with the provisions of the Act and these rules atleast once in every twelve months.

9. *Marking of weights and measures in sealed container* – No person shall sell, offer for sale, expose for sale, or have in his possession for sale any pre-packed article unless, the package or container bears thereon a true statement in plain character of the net weight or measure of the articles contained therein.

10. *Limits of error to be tolerated in weights and measures.* - (1) Permissible margin of error on re-verification of weights, measures, weighing instruments or measuring instruments shall be the same as provided for verification.

(2) For capacities not stipulated in these rules, the permissible margin of error shall be proportional.

11. *Licensing of Manufacturers, Repairers and Dealers of weights and Measures,*-- (1) Every manufacturer or repairer of, or dealer in, weights, measures, weighing instruments or measuring instruments shall obtain a license from the Controller in appropriate form specified in Schedule VII and subject to the conditions specified thereof in the said Schedule.

(2) The fee payable for such licenses and for their renewal shall be as specified in Schedule VIII.

(3) the Controller may, by order in writing, refuse to grant or renew a license, or suspend or cancel the license of a manufacturer or, repairer of or dealer in, weights and measures, weighing instruments and measuring instruments if he is satisfied that such manufacturer, repairer or dealer has no proper and adequate workshop facilities or staff or has ceased to exist as such, or is otherwise incompetent or has failed to comply with any provision of the Act or these rules.

Provided that no such order shall be made without giving the aggrieved person a reasonable opportunity of being heard in person or in writing.

(4) Any person aggrieved by an order made under sub-rule (3) may, within fifteen days of such order, prefer an appeal to Government.

(5) An appeal under sub-rule (4) shall be preferred in form of a memorandum setting forth the groups of the appeal.

(6) The Controller shall maintain a register of licensed manufacturers, repairers of, and dealers in, weights, measures, weighing instruments and measuring instruments in the form set out in Schedule-IX.

12. *Security* .- (1) The manufacturers and repairers of, Dealers in weights, measures, weighing instruments and measuring instruments required to furnish security shall deposit with the Controller the amount of securities in the form of National Defence Saving Certificates pledged to the Controller.

(2) The securities or any part thereof may be forfeited under section 16 after the defaulter has been given an opportunity to explain.

13. *Manufacturer etc. to maintain records and documents*. – Every manufacture, repairer of, or dealer in, weights, measures, weighing instruments or measuring instruments shall maintain records in forms 'A', 'B' and 'C' respectively and submit such reports as the Controller or Inspector may direct.

14. *Levy of fee* - (1) The fee payable for verification or re-verification and stamping of weights, measures, weighing instruments and measuring instruments at the office of the Inspector shall be as specified in Schedule-X.

(2) If verification or stamping is done by the Inspector at the premises of any person, owner or user thereof, an additional fee at half the rate specified in schedule X, shall be charged from such person, owner or user, as the case may be, and he shall also pay the Actual travelling expenses incurred by the Inspector for visiting the premises and also the cost of transport of the working standards, balances and other equipments;

Provided that no additional fee shall be charged, for verification re-verification and stamping on site of:-

(i) Petrol pumps or measuring instruments, weigh bridges, dormant platform machines and such other instruments as may be specified by the Controller.

(3) A weight, measure, weighing instrument or measuring instrument which on verification, is found to be incorrect, shall be returned to the person concerned for adjustment and when the necessary adjustment has been carried out such weight, measure, weighing instrument or measuring instrument shall be re-verified on payment of 50% of the fee prescribed for permanent shall be re-verified on payment of 50% of the fee prescribed for verification within the period of 15 days and shall, if found correct be stamped.

(4) Notwithstanding anything contained in rule 16, no fee shall be payable for re-stamping of weights, measures, weighing instruments, measuring instruments within the period specified in rule 8 from the date on which it was last stamped.

15. (1) *Collection of fee and deposit into Government Treasury.* - (1) Be-commencing the work of verification or re-verification, the Inspector shall receive the prescribed fee form or on behalf of the person concerned and issue a receipt in the form to be laid down by the Controller and two copies of such receipts shall be kept on record.

(2) The Inspector shall maintain a register in the form to be laid down by the Controller and shall fill it daily showing the amount of fee and carriage charges collected during the day.

(3) The fee including additional fee and other charges, if end, collected by the Inspector shall be paid into the nearest Government Treasury on every Monday of credit to Head "XXXVI-Miscellaneous Department. Miscellaneous" and the Treasury receipt shall be pasted in the accounts register to be maintained by the Inspector and intimation to this effect shall be sent by him to such Officer as may be nominated by the Controller in this behalf.

(4) Re-verification fee payable for the previous periods, will also recoverable at the prescribed rates in addition to the penalty prescribed by the law.

16. *Inspection and verification of weights and measures etc*. - (1) An Inspector, shall visit every Factory and place under his jurisdiction where weights and

measures, weighing instruments and measuring instruments are used or kept for use in transactions of trade and commerce or otherwise, for inspection or for verifying the same atleast once in a year and may also from time to time, make surprise visits which may be necessary for the proper discharge of his duties.

(2) All weights, measures, weighing instruments and measuring instruments shall be tested and verified in clean condition and an Inspector may require the owner or user of such weights or instruments to clean them before such test and verification.

(3) Where a weight, measure, weighing instrument or measuring instrument is brought to an Inspector for verification the Inspector shall proceed with the re-verification, in the same manner as in the case of verification, but it shall not be necessary for him to verify a glass or earthenware measure unless the original stamp has been deface.

(4) The denomination or capacity of weights measures, weighing instruments and measuring instruments, if not marked in full, shall be indicated by using the abbreviations as specified in schedule-XI.

17. *Stamping of commercial weights and measures etc.-* (1) Before stamping any weight, measure, weighing instrument or measuring instrument, used or intended to be used in transaction of trade and commerce, an Inspector shall satisfy himself that such weight or measure, weighing instrument or measuring instrument complies with the provisions of the Act and these rules.

(2) Every weight, measure, weighing instrument, measuring instrument presented for verification shall be complete and shall not bear any mark which may be mistaken for the Inspector's stamp.

(3) The Inspector shall stamp every weight, measure, weighing instrument or measuring instrument with a uniform stamp supplied by the Controller.

Provided the no weight, measure, weighing instrument or measuring instrument shall be stamped, which in the opinion of the Inspector, is not sufficiently strong to withstand the wear and tear of its ordinary normal use in trade.

Provided further that no weighing instrument or measuring instrument, other than Beam Scale of Class 'A' as specified in Schedule VI, manufactured after the camping into force of these Rules hall be so stamped unless a plug or stud of soft metal on which to place Inspector's stamp, is so made by the manufacturer that it cannot be removed by under-cutting or in any other manner.

(4) The Inspector shall mark the quarter stamp on all weights, measures (other than Glass, earthenware or enabled metal measure) weighing instruments or measuring instruments verified and stamped by him except where the size of such weights, measures, weighing instruments and measuring instruments make it impracticable to do so.

(5) Where a weighing instruments has interchangeable or reversible parts it shall not be stamped, unless the interchange or reversal down not affect on the accuracy of the instruments.

(6) No weighing instrument with removable parts, the removal of which affects the accuracy of the instrument shall be stamped unless the parts are such that the instrument cannot be used without them.

(7) No weight, measure, weighing instrument or measuring instrument for which no special provision is made in these rules hall be verified and stamped unless it is of a pattern approved by the Controller.

(8) On completion of verification and stamping, the Inspector shall issue a certificate of verification in the form specified in Schedule-XII.

(9) Every person to whom a certificate of verification is issued shall exhibit the same at conspicuous place in the premises where the weights, measures, weighing instruments or measuring instruments to which the certificate relates are use, and in the case of hawker, such certificate shall be kept on his person.

18. *Procedure for inspection etc*. – In the discharge of his duties of inspection, verification or re-verification, the Inspector shall observe the procedure laid down in Schedule XIII.

19. *Qualification of Inspectors, etc*. – No person shall be appointed as-

(i) Assistant Inspector, unless he is F.Sc. with physics and mathematics or a diploma holder in mechanical engineering with three years course;

(ii) Inspector, unless he is B.Sc. with physics and mathematics or has been Assistant Inspector for a period of five years;

(iii) Assistant Controller, unless he is M.Sc. or has been Inspector for a period of five year;

(iv) Deputy Controller, unless he is M.Sc. or has been Inspector for a period of five years o is an Assistant Controller;

(v) Additional Controller, unless he has worked in the Department for a period of seven years; and

(vi) Controller, unless he is Director or has worked in the Department for a period of ten years.

20. Continuance of Staff.-Notwithstanding the provisions of rule 19 the persons working as Manual Assistants and Inspectors immediately before the coming into force of the Act shall respectively be deemed to have been appointed as Assistant Inspectors and Inspectors under the Act.

21. Duties of Inspectors.-In addition to any other duties an Inspector may-

(i) Prepare and submit such reports and returns as may be directed by the Controller;

(ii) Keep and maintain such books, records and forms as may be required by the Controller;

(iii) Keep in safe and proper custody the working standards and other instruments, equipments and articles entrusted to him or seized and detained by him in connection with the discharge of his duties;

(iv) Popularize the enforcement of standards of weights and measures;

(v) Survey of traders, industrial establishment, manufacturers, repairers and other dealers coming the purview of the Act and these rules;

(vi) Conduct prosecutions under the Act and the rules; and

(vii) Perform any other duty that may be assigned to him b the Controller.

22. *Security by Inspectors.* - (1) Every Inspector shall deposit a sum of one thousand rupees by way of security in the form of National Defence Saving certificates pledged to the Controller may specify.

(2) The amount of security under sub-rule (1) may be deposited in such installments as the Controller may specify.

(3) The certificates pledged under sub-rule (1) shall, subject to clearance of dues if any, outstanding against an Inspector, be refunded if he ceases to be such Inspector.

23. *Articles to be provided to the Inspectors*. - (1) Every Inspector shall be provided with working standards, scale beams, and balances for verifying weights, measures, weighing instruments, measuring instruments adequate instrumental equipments and travelling kit and such other material and forms as the Controller may consider necessary for an Inspector to discharge his duties properly.

(2) Every Inspector shall be provided with such dies, punches, stencil plates, branding iron, etching and engraving and other implements as may be necessary for affixing the verification stamp, the design and number of which, shall be specified by the Controller.

24. *Revision.* – Any person aggrieved by a decision on appeal under the Act or these rules may, within 30 days of such decision. Apply for revision-

(i) if it is a decision of the Inspector or Assistant Controller to the Deputy Controller;

(ii) if it is a decision of the Deputy Controller to the Controller; and

(iii) if it is a decision of the Controller, to Government.

25. *Conversion into Standard weights and measures.* – Value expressed in terms of any weight or measure other than in terms of a standard weights and measures may be converted according to the conversion table given in Schedule XIV.

26. *Penalty.* - Any person who contravenes any provision of these rules shall be punished with a fine which may extend to two thousand rupees.

K. IDRIS
Secretary to Government of Sind.

SCHEDULE
(See rule 3)

Denominations, material, designs and permissible errors of working standards of weight and measures.

1. Working Standard of Weights

1. Working Standard of Weights
(1) Denominations

Kilogram Series				Gram Series	Milligram Sires
—	. . .	. . .	. . .	500	500
20	. . .	. . .	. . .	200	200

10	. . .	. . .	. . .	200	200
5	. . .	. . .	. . .	100	100
2	. . .	. . .	. . .	50	50
2	. . .	. . .	. . .	20	20
1	. . .	. . .	. . .	20	20
				10	10
				5	5
				2	2
				2	2
				1	1

2. Material

2.1 Weight of 20 kg to 1 kg shall be cast from bronze of the following composition:-

Constituent				Percent
Copper	. . .	. . .	. . .	87.5 to 88.5
Tin	. . .	. . .	. . .	9.5 to 10.5
Zinc	. . .	. . .	. . .	Remainder

2.2 Weights of 500 g to 100 mg shall be made out of copper-nickel of the following composition:-

Copper	…	…	…	75	per cent
Nickel	…	…	…	25	per cent

2.3 Weights of 50 mg to 1 mg shall be made out of commercially pure aluminum sheets.

3.4 **Shape**

3.1 Weights of 20 kg and 10 kg shall be cylindrical in shape with screwed handle from top duly sealed and cored from bottom for adjustments with locking screw duly sealed. To make a distinction between secondary and working standards, a small ‘w’ within a circle “w” shall be stamped at the base of each of the working standard weights.

3.2 Weights of 5 kg to 20 g shall be cylindrical in shape with integral knob handle at the top and cored from base with screw and lead sealing arrangements. To distinguish it from secondary standard a small ‘w’ with in a circle “w” shall be stamped at the base of the working standard

3.4 For milligram series, the weights shall be in the form of square with one of the sides bent at right angles to the flat surface for ease of handling.

4. *Limits of error be tolerated*. – The limits of error in excess and in deficiency to be tolerated shall be as follows:-

Denomination				Limits of error to be tolerated
1				2
				± mg
20 kg	. . .	. . .	. . .	1,000
10 kg	. . .	. . .	. . .	500
5 kg	. . .	. . .	. . .	250
2 kg	. . .	. . .	. . .	100
1 kg	. . .	. . .	. . .	50
500 g	. . .	. . .	. . .	25
200 g				10
100 g	. . .	. . .	. . .	5
50 g	. . .	. . .	. . .	3
20 g	. . .	. . .	. . .	2.5
10 g	. . .	. . .	. . .	2.0
5 g	. . .	. . .	. . .	1.5
2 g	. . .	. . .	. . .	1.2
1 g	. . .	. . .	. . .	1.0
500 mg	. . .	. . .	. . .	0.8
200 mg	. . .	. . .	. . .	0.6
100 mg	. . .	. . .	. . .	0.5
50 mg	. . .	. . .	. . .	0.4
20 mg	. . .	. . .	. . .	0.3
10 mg	. . .	. . .	. . .	0.25
5 mg	. . .	. . .	. . .	0.20
2 mg	. . .	. . .	. . .	0.20
1 mg	. . .	. . .	. . .	0.20

11. Working standard for linear Measures.

1. Denomination

1 Meter.

2. Detailed requirements.

2.1 The standard shall be in the form of a bar with one bevelled edge. The bevel carries the graduation and shall be sloped about 30 degree from the horizontal. The outside edge formed by the intersection not more than 0.4 mm wide. The bar may be hollowed from underneath to reduce the weight and seating area and shall provide for total dept. of section not less than 18 mm. There shall be a un-graduated portion ex-tending beyond the terminal graduations on either side by about 38-40 mm.

2.2 . A slider bar is to be secured to the top to the standard with a magnifying lens to facilitate reading the finer division.

2.3. The method of securing the slider bar to the standard shall be such as to prevent distortion of the later should unequal expansion takes place.

2.4. Suitable handles of the same material as given in paragraph 2.8 shall be provided so that contact between hands and metal can be avoided.

2.5. The supporting points (where Handles are fixed) shall be between 0.55 and 0.60 of the blank apart and shall be symmetrically placed relative to the length of the blank.

2.6. The measure shall be quite robust, straight and free from flaws.

2.7 The graduated surface shall be highly polished and free from surface irregularities in the neighborhood of graduated lines. If plated the surfaces shall be free from undesirable degree of creasing in the neighborhood of lines.

2.8. The graduated surface shall be rustles iron (chromium iron) or stainless steel(nickel chromium steel) or high nickel iron (25% nickel or more).carbon steel with low or high carbon percentage suitably protected against corrosion by chromium plating or hard brass (tropicalised brass) of the composition copper 50-60% lead 2.0 to 2.35% and zinc remainder can also be used. In the latter case the measures are to be lacquered.

3. Graduation.

3.1. The measures shall be divided into 100 centimeters. The zero graduation shall be marked ‘O’ and final graduation marked **“METER”.**

The numbers and other markings shall read progressively from left to right with the zero at the extreme left and the bevel nearest to the observe. The first and the last cm shall be sub-divided into mm.

3.1. .1. Graduation shall be suitably figured and marked at convenient intervals using abbreviations namely:

Centimeter=cm:
Millimeter=mm:

3.1. 2 In addition to the graduated meter interval a cm before zero shall be sub-divided into millimeters and read from right to left from the zero graduation. The cm before zero shall be marked ‘cm’ at the outer- most graduation.

3.2. The graduation lines shall be well defined. Of symmetrical section and have clean edges.

3.3. The width of each graduation line shall be constant. + 10% of average width.

3.4 The graduation lines shall not differ in width, one from the other. +10% of ever Age width of all the lines.

3.5. The width of graduation lines shall be between 0.003 to 0.015 mm (3 to 15 microns).

3.6. The graduation lines shall be straight.

3.7. The graduation lines shall be parallel to one another.

3.8. The graduation lines shall be square to scale axis.

3.9. In case of finer graduations (i.e. cm. before Zero to 1 cm and 99th cm to 1 meter) spacing shall be Such that any interval from one line to another is at The correct nominal position. $\pm$10 mm (10 microns)

4. *Limits of errors to be tolerated.*--- The limits of error to excess and deficiency to be tolerated shall be as follows:--

(a) up to 1 mm = $\pm$ 0.01 mm (10 microns)

(b) Above 1 mm and Not exceeding 1 cm = + 0.05 mm (50 microns)

(c) Up to 1 meter =+ 0.25 mm (250 microns) (Overall Tolerance).

Note-----(i) Each working standard shall bear the serial number of the region / authority to which it belongs and stamp of its standardization.

(ii) These working standards shall be submitted for verification against the secondary standard with the specified time limit. If they are not sent up for revivification within the specified time limit, they shall no longer be legal standards.

III. Working standard of Capacity Measures.

1.1. Denominations.

Liter Series (1)				Millimeter Series (ml)
10	. . .	. . .	. . .	500

5	. . .	. . .	. . .	200
2	. . .	. . .	. . .	100
1	. . .	. . .	. . .	50
				20
				10

1.2 Materials of construction.-Working standard of capacity measures shall be prepared out of oxygen free, deoxidized annealed copper sheet of deep drawing quality.

1.3 Shape.

1.3.1 Working standard of capacity measures of 10 liters shall be cylindrical with two handles securely fixed to the side. The diameter of the measures shall be approximately equal to its height.

1.3.2. All other working standards of capacity measures shall also be cylindrical but shall not be provided with handles. The diameter of each measure shall be suitably reinforced.

1.3. 3. The denomination of the working standard of capacity measure shall be engraved on the outside surface.

1.3. 4. The outside of the body of the working standards of capacity measure shall oxidized to give a smooth dull black surface and the inside shall be tinned.

1.3. 5. Each set of working standard of capacity measures shall be supplied with specially selected striking glasses and the measures and glasses shall be securely packed in velvet lined teak-wood boxes.

2. limits of error to be tolerated----The limits of error in excess and deficiency to be tolerated shall be as follows:-

Denomination		Limits of error to be tolerated		
				(ml)
10 liter	…..	…..	…..	8
5 liter	…..	…..	…..	4
2 liter	…..	…..	…..	2
1 liter	…..	…..	…..	1.5
500 ml	…..	…..	…..	1.0
200 ml	…..	…..	…..	0.8
100 ml	…..	…..	…..	0.6
50 ml	…..	…..	…..	0.4
20 ml	…..	…..	…..	0.2
10 ml	…..	…..	…..	0.2

SCHEDULE II

(see rule 4)

Denomination material design and permissible errors of secondary standards of weight and Measures.

1. Secondary standard of Weights.

1.1 *Denominations.*

Kilogram Series (kg)						Gram Series (g)	Milligram Series (mg)
10	. . .	. . .	. . .	. . .	. . .	500	500
5	. . .	. . .	. . .	. . .	. . .	200	200
						200	200
						100	100
2	. . .	. . .	. . .	. . .	. . .	50	50
2	. . .	. . .	. . .	. . .	. . .	20	20
						10	10
1	. . .	. . .	. . .	. . .	. . .	5	5
						2	2
						2	2
							1

1.2 Material.

1.2.1 Weight of 10 kg to 1 kg shall be cast from bronze of the following composition:-

Constituent				per cent.
Copper	**. . .**	**. . .**	**. . .**	**87.5 to 88.5**
Tin	**. . .**	**. . .**	**. . .**	**9.5 to 10.5**
Zinc	**. . .**	**. . .**	**. . .**	**1.5 to 2.5.**

1.2.2. Weight of 500 mg to 100 mg shall be made of cupronickel having a nominal composition of 75 per cent copper and 25 per cent nickel.

1.2.3 Weights of 50 mg to 1 mg shall be made of commercial aluminum sheets.

1.3. Shape of weights.

1.3.1 10 kilogram,----- Cylindrical body cored on top for adjustment separate handle, screwed down to body and sealed.

1.3.2. 5 kilogram to 20 gram----Basically cylindrical with a knob on top and cast integrally, and at the bottom a screwed core with the plug duly sealed. Dimensions relative to the capacity of each weight.

1.3.3. 10 gram to 1 gram----Cylindrical bend body with integral knob out locking arrangements.

1.3.4. Milligram series-----square sheets, with one corner bent at right angles.

1.4. *Limits of error to be tolerated*------ the limits of error to be tolerated in excess and in deficiency shall be as follows:-

Denomination	Limits of error to be tolerated
	(mg)
10 kg	50
5 kg	25
2 kg	10
1 kg	5
500 g	2.5
200 g	1.0
100 g	0.5
50 g	0.3
20 g	0.25
10 g	0.20
5 g	0.15
2 g	0.12
1 g	0.10
500 mg	0.08
200 mg	0.06
100 mg	0.05
50 mg	0.04
20 mg	0.03
10 mg	0.025
5 mg	0.020
2 mg	0.02
1 mg	0.02

11. ***SECONDARY STANDARD OF LINEAR MEASURES***.

(1) **Denomination**.
1 Meter.

(2) **Detailed requirements.**

2.1. The standard shall be in the form of a vary with one beveled edge as per sketch given below. The bevel shall carry the graduations and shall be sloped about 30 from the horizontal. The outside edge formed by the inter-section of the beveled face and the underneath surface shall have a the underneath to reduce the

weight and seating area and shall be an un-graduated portion extending beyond the terminal graduation on either side by about 30 to 40 mm. The bar may be hollowed from the underneath to reduce the weight and seating area and shall be an un-graduated portion extending beyond the terminal graduation on either side by about 30 to 40 mm.

2.2. A slider bar shall be secured to the top of the standard with a magnifying license to facilitate reading the finer scales.

2.3. The method of securing the slider bar to the standard shall be such as to prevent distortion of the latter should unequal expansion takes place.

2.4. Suitable handles of the same material as given in paragraph 2.8 shall be provided so that contact between hand and metal can be avoided.

2.5. The supporting points (where handles are fixed) shall be between 0.55 and 0.60 of the blank apart and shall be symmetrically placed relative to the length of the blank.

2.6. The measure shall be quite robust, straight, and free flaws.

2.7. The graduated surface shall be highly polished and free from surface irregularities in the neighborhood of the graduated lines. If plated, the surface shall be free from undesirable degree of crazing in the neighborhood of lines.

2.8. The metal shall be rustles iron e.g. chromium iron) or stainless steel (nickel chromium steel) or high nickel (25% or more) iron. Carbon steel with lower high carbon percentage suitably protected against corrosion by chromium plating or hard brass (tropicalized brass) of the composition, copper 56----60% lead 2.0 to 2.35% and Zinc remainder can also be used. In the latter case the measures are to be lacquered.

3. **Graduations**

3.1 A measure shall be divided into hundred centimeters. The zero graduation shall be marked ‘O’ and the final graduation shall be marked ‘METER’

The numbers and other markings shall read progressively from left to right with the zero at the extreme left and the bevel nearest to the observer, the first and the first and the last cm shall be sub – divided into mm.

3.1. 1 Graduation shall be suitably figured and marked at convenient intervals using abbreviations, namely:--

Centimeter=cm
Millimeters=mm

3.1. 2. In addition to the graduation meter intervals a cm before zero shall be sub-divided into mm and read from right to left from the zero graduation the cm before zero shall be marked ‘cm’ at the outermost graduation.

3.2. The graduation lines shall be well defined of symmetrical section and have clean edges.

3.3. The width of each graduation line shall be constant + 10% of average width.

3.4. T he graduation lines shall not differ in width.

One from the other. ± 10% of average width
Of all he lines.

3.5. The width of graduation lines shall be between 0.005 to 0.015 mm (5 microns to 15 microns.)

3.6. The graduation lines shall be straight.

3.7. The graduation lines shall be parallel to one another.
3.8. The graduation lines shall be square to the scale axis.

3.9. In the case of finer graduations, the spacing's shall be such that any interval from one line to another is at the correct nominal position and spacing.

4. Limits of error to be tolerated---The limits of error

(a) Upto 1 mm = ± 0.015 mm (15 microns)
(b) Above 1 mm and not exceeding 1 cm = ± 0.075 mm (76 microns)
(c) Up to 1 meter (overall tolerance) = ± 0.4 mm (400 microns)

Note: (1) Each working standard shall bear the serial No., the name of the region/authority to which it belongs and stamp of its standardization.

(2) These working standards shall be submitted for verification against the secondary and reference standards within the specified time limit.

III. SECONDARY STANDARD MEASURES OF CAPACITY.

1.1. Denominations

Liter Series (l)							Milliliter Series (ml)
10	. . .	. . .	. . .	. . .	. . .	. . .	500
5	. . .	. . .	. . .	. . .	. . .	. . .	200
2	. . .	. . .	. . .	. . .	. . .	. . .	100
1	. . .	. . .	. . .	. . .	. . .	. . .	50
							20
							10

1.2 Material

Secondary standard measures of capacity shall be cast of bronze of the ame composition as in the case of secondary standard weights.

1.3. Shape of Capacity Measures

1.3.1 10 and 5 Liter —— Cylindrical with inside diameters approximately equal to the height of the measures and two handles attached securely to their sides.

1.3.2. 2 Liters and below. Same shape as above but shall have no handle only.

1.3.3. The denominations of the measures shall be engraved on the outside surface.

1.3.4. Each set of measures shall be supplied with specially selected striking glasses.

1.4. Limits of error to be tolerate —— The limits of error in excess and deficiency to be tolerated shall be as follows:

Denomination							Limits of error to be tolerated (ml)
10 l	. . .	. . .	. . .	. . .	. . .	. . .	4
5 l	. . .	. . .	. . .	. . .	. . .	. . .	2
2 l	. . .	. . .	. . .	. . .	. . .	. . .	1
1 l	. . .	. . .	. . .	. . .	. . .	. . .	0.8
500 ml	. . .	. . .	. . .	. . .	. . .	. . .	0.5
200 ml	. . .	. . .	. . .	. . .	. . .	. . .	0.4
100 ml	. . .	. . .	. . .	. . .	. . .	. . .	0.3
50 ml	. . .	. . .	. . .	. . .	. . .	. . .	0.2
20 ml	. . .	. . .	. . .	. . .	. . .	. . .	0.1
10 ml	. . .	. . .	. . .	. . .	. . .	. . .	0.1

SCHEDULE III
(See rule 5)

Specification with permissible limits of sensitiveness of precision Balances and secondary standard balances.

Capacity							Sensitiveness mg/division of scale
20 kg	. . .	. . .	. . .	. . .	. . .	. . .	5
5 kg	. . .	. . .	. . .	. . .	. . .	. . .	1
1 kg	. . .	. . .	. . .	. . .	. . .	. . .	0.5
200 g	. . .	. . .	. . .	. . .	. . .	. . .	0.05
20 g	. . .	. . .	. . .	. . .	. . .	. . .	0.01
2 g	. . .	. . .	. . .	. . .	. . .	. . .	0.005

Note:— Precision balances and secondary standard branches shall be used only for indoor work in laboratories and shall be handled carefully by competent trained personnel .

Note 2. —— The specifications of precision balances and secondary balances shall be according to International recommendations.

SCHEDULE IV
(See rule 5)

Specification with permissible limits of sensitiveness of working standard balances.

Capacity							Sensitiveness mg/division of scale
50 Kg	..	..	..	..	..	..	100
20 Kg	..	..	..	..	..	..	40
5 Kg	..	..	..	..	..	..	10
1 Kg	..	..	..	..	..	..	1
200 g	..	..	..	..	..	..	1
20 g	..	..	..	..	..	..	1
2 g	..	..	..	..	..	..	0.02

2. The working standard balances shall be both of indoor and outdoor types.

3. Design and construction --- The balances shall be constructed of non-magnetic materials and shall be robust in construction. They shall be capable of being easily assembled. Outdoor type balance shall be fitted in suitable carrying cases so that they may withstand transport conditions. Cases. Portable balances of 5 kg. Capacity and below shall be fitted in one carrying case for ease of transportation.

SCHEDULE V
(See rule 6)

Specifications, denominations, material and designs of 20commercial weight and measures.

COMMERCIAL WEIGHTS

1. Rectangular bar weights.

1.1 Denominations.—5, 10, 20 and 50 kilograms.

1.2 Material.

Body. Grey cast iron conforming to BS 1452---1956.

Handle. Type 1 Seamless steel tube.

Type 2 Cast iron integral with body.

Type 3. Cast in handle made of mild steel.

1.3 Method of Manufacture.—Any satisfactory casting or foundry method,

1.4. Shape.—It must be in one single piece in the shape of rectangular parallel-pipe with rounded edges and a rigid handle. The shape and dimensions shall conform to figures 1 and 2 read with tables I and II

1.5. Adjusting cavity.—One rectangular loading hole on the under surface tapering outside along the width.

1.6. Adjustments.—The weights provided with loading holes shall be adjusted by pouring the required weighed quantity of molten lead into the loading hole and pressing the lead firmly. The. Lead used for adjusting may preferably confirm to grade per cent of BS 334—1934.

1.7. Marking and distinctive signs.—Information relating to nominal value and trade mark etc. both in English and Urdu must appear in relief either on top of the sides or on face of the central part of the weight. The nominal value of the weight must be indicated in the form of 5 kg, 10 kg, 50 kg. The letters k and g must be small.

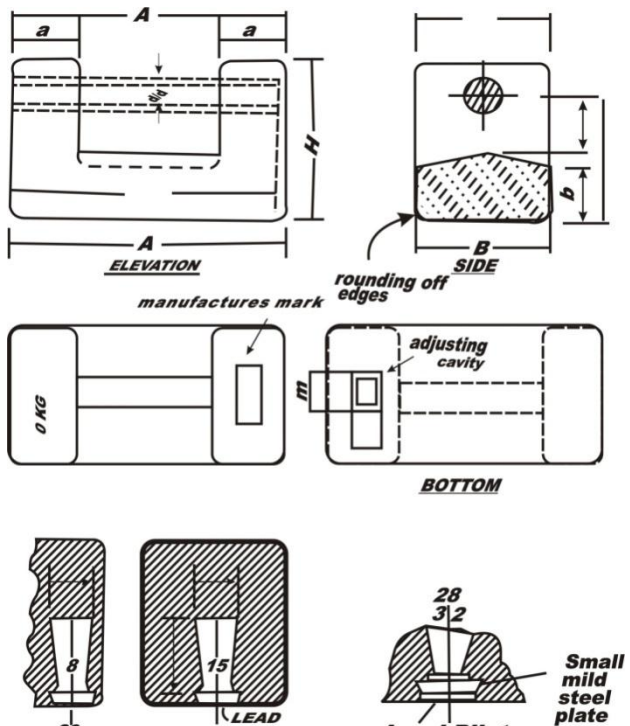

Details of Filling up of Loading Hole.

Fig. 1 Rectangular Bar Weights Type-1 and type-3 where in seamless steel Tube on mild steel rod is to be used.

TABLE -1 OF DIMENSIONS OF RECTANGULAR BAR WEIGHTS (IN MILLIMETERS)
TYPE 1

Nominal Value	A	AI	BB	Bi	H	a	b	c	d	d/d	l	r	o	m	n	p
5 Kg	150	152	75	77	84	36	30	6	66	12/20	145	5	12	16	13	36
10 Kg	192	193	95	97	109	46	38	8	84	12/30	185	6	16	35	25	46
20 Kg	230	234	115	117	139	61	52	12	109	24/32	220	8	20	50	38	64
50 Kg	310	314	155	157	292	83	72	16	152	24/32	300	10	25	70	40	94

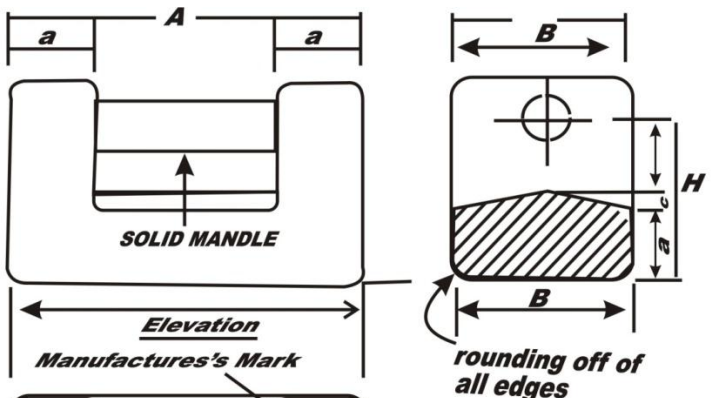

Fig – 2 Rectangular Bar weight with cast iron handle

TABLE II
DIMENSIONS IN RESPECT OF FIG-2-

(In millimeters)

Nominal		A	AI	B	BI	H	a	b	c	h	d	r	o	m	n	p
5 Kg	…	150	152	5	77	84	36	30	6	66	19	5	12	16	13	55
10 Kg	…	190	193	95	97	109	46	38	8	84	25	6	16	35	25	70
20 Kg	…	230	234	115	117	139	61	52	12	109	29	8	20	50	30	95
50 Kg	…	310	314	155	157	192	83	74	16	152	40	10	25	70	40	148

Dimensions A and AI as well as B and BI can be reversed.

2. Flat Cylindrical Weights.

2.1. Denominations:

Kilogram series					Gram series
1	…	…	…	…	500
2	…	…	…	…	200
3	…	…	…	…	200
					100
					50
					20
					20
					10
					5
					2

2.2. *Material*.— Flat cylindrical weights shall conform to one of the following materials:—

1. Cast iron conforming to grade 10 B of BS 1452—1956.
2. Forged mild steel conforming to BS 2566—1955.
3. Cast brass conforming to grade 3 of BS 1944—41.
4. Brass rods conforming to BS 1949—1953.
5. Cast bronze conforming to ES 1400—1948.

2.3. *Method of Manufacture*.— Any method appropriate to the material chosen.

2.4. *Shape*.— The weights of denominations of 2 kg and below to and including 1 g shall be flat, cylindrical in shape shall have a distinct downward taper. The shapes and dimensions shall conform to figure 3 read with table III.

2.5. *Adjusting cavity*.— Weights of denominations of 2 kg and below to and including 20 g shall have a round loading hole tapering, outwards in the centre of the underside. The weights of 1052, 1 g must be solid without adjusting cavity.

TABLE III. DIMENSIONS OF FLAT CYLINDRICAL WEIGHTS

(Al dimensions in millimeter.)

Denomination		A	B	C	D	E	F	G	H
2 Kg	…	101	76	30	94	10	18	40	34
1 Kg	…	84.5	58	16	76	4	15	25.5	20
500 g	…	64	46.5	16	56	3	14	23	20
200 g	…	50	34.5	13	45	2.5	9.5	15	15
100 g	…	38	26	11	33.5	2	9.5	13	13
50 g	…	29	20.5	10	25	2	8	11.5	12
20 g	…	22	16.5	8	19.5	1	4	8	10
10 g	…	17.5	12.5	…	16	1	…	6	…
5 g	…	13	10	…	11.0	1	…	5	…
2 g	…	10	7.5	…	9	0.5	…	3.5	…
1 g	…	8	…	…	6.5		…	2.5	…

Tolerance on Dimensions ±10 per cent.

Fig 3. Flat Cylindrical Weight

3.1. Adjustments:

The weights provided with loading holes shall be adjusted by pouring the required weighed quantity of molten lead into the loading hole and pressing the lead-firmly. The lead used for adjusting may preferably conform to grade per cent of BS 334—1934.

3.2. Permissible margin of error for rectangular Bar weights and flat cylindrical weights:

Nominal value	Permissible error on (mg)	
	On verification	On inspection
50 Kg	±80000	± 8000
20 Kg	±32000	±3200
10 Kg	± 16000	± 1600
5 Kg	± 8000	± 800
2 Kg	± 4000	± 400
1 Kg	± 2000	± 200
500 g	± 1000	± 100
200 g	± 500	± 50
100 g	± 300	± 30
50 g	± 300	± 30
20 g	± 200	± 20
10 g	± 200	± 20
5 g	± 100	± 10

2 g	± 5 0	± 5
1 g	± 5 0	± 5

4.1. Bullion Weights:
4.1 Denominations:

Kilogram series				Gram series
10	…	…	…	500
5	…	…	…	200
2	…	…	…	100
2	…	…	…	50
1	…	…	…	20
				20
				10
				5
				2
				2
				1

TABLE IV.—DIMENSIONS OF CYLINDRICAL BULLION WEIGHTS' With HANDLE

Denomination		A	B	C	D	E	F	G	H	L	J	K	S
20 Kg	…	133	157	71	106	41	16	55	51	25	26	14	25
10 KG	…	106	130	64	85	33	14	50	49	25	26	13	2

All dimensions in millimeters.

Tolerance on Dimensions: ± 5 per cent

TABLE V.—DIMENSIONS OF CYLINDRICAL BULLION WEIGHTS WITH KNOB

Denomination			A	B	C	D	E	F	G	H	L	J
5 Kg	…	…	86	88	41	56	37.5	22.5	18.5	8	19	20
2 Kg	…	…	64	67	27	39	24	144	13	27	17	17.5
1 Kg	…	…	50	50	23.5	33	21	12	11.5	25	16	17
500 g	…	…	41	39	20	25	17	10.5	8.5	19	16	17
200 g	…	…	32	29	16	20	12	9	7	13.5	13	13.5
100 g	…	…	24	24	12	17	9.5	6	6	11	11	12
50 g	…	…	19	19	10	14	8	5	5	9	9.5	10
20 g	…	…	14	14	6	10	6	3	3	6	6	7
10 g	…	…	11	11	5	8	5	3	2	…	…	…
5 g	…	…	9	9	4	6	4	2	2	…	…	…
2 g	…	…	6	6	3	4	2	1.5	1.5	…	…	…
1 g	…	…	6	6	2	3	1	1	1	…	…	…

All Dimensions in Millimeters.

Tolerance on Dimensions: (a) Weight above 1 kg ± 5 per cent.

(b) for weights 1 kg and below ±10 per cent

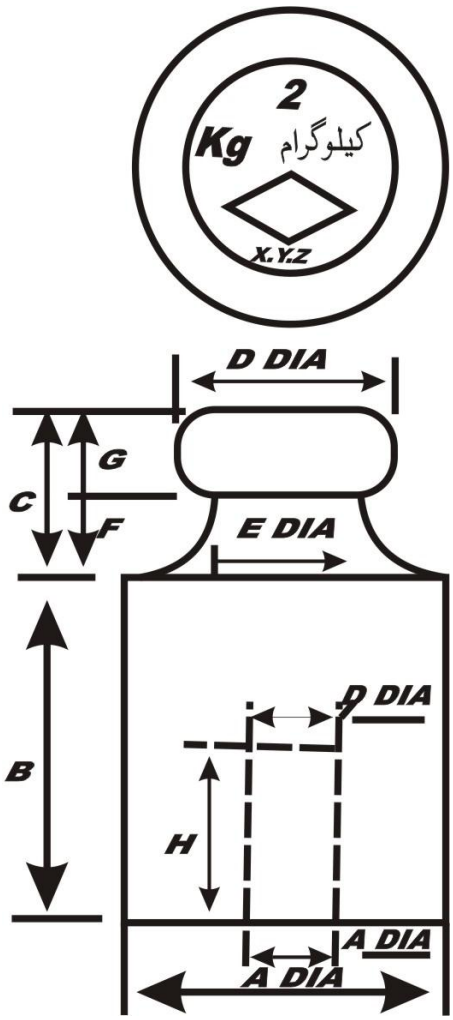

Fig 4 Cylindrical Bullion weight with K

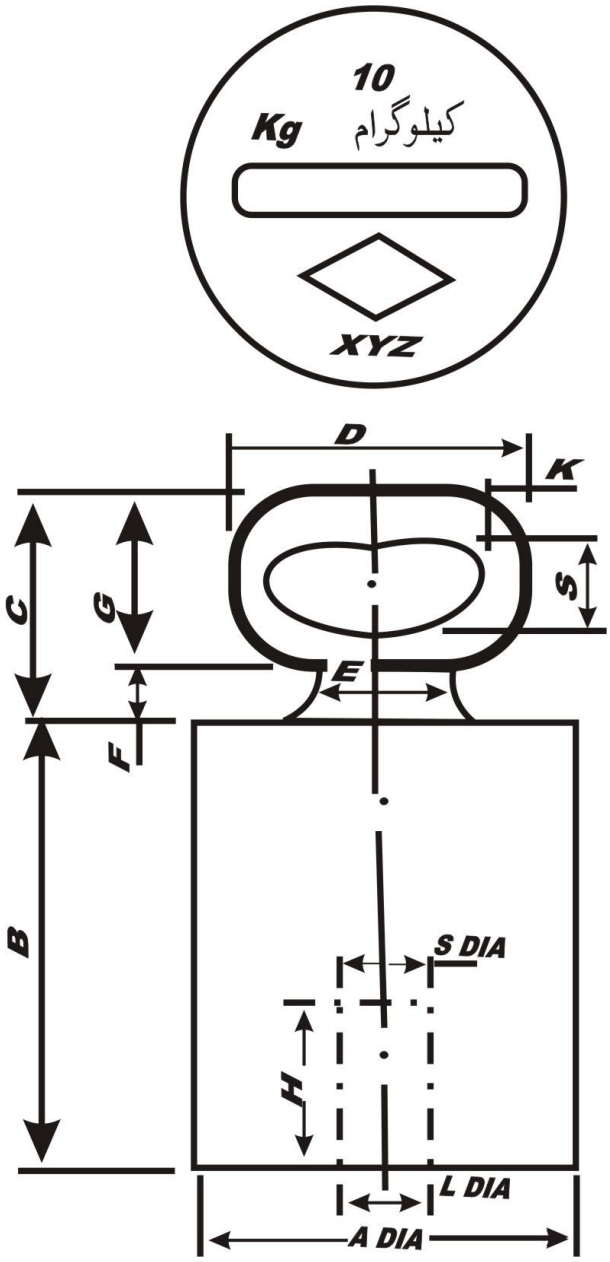

Fig. 5. Cylindrical Bullion Weight with Handle

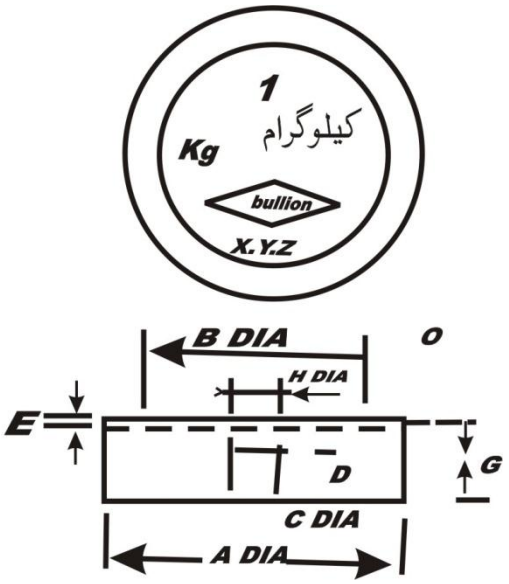

Fig. 6. Flat Cylindrical Bullion Weight.

TABLE VI—DIMENSIONS OF FLAT CYLINDRICAL BULLION WEIGHTS

Denomination			A	B	C	D	E	F	G	H
1 Kg	…	…	82.5	66.5	16	16	3	8.0	24	17
500 g	…	…	65	49.5	16	13	2.5	7.75	19	17
200 g	…	…	48.0	38.5	13	9.5	2.5	4.75	14	14
100 g	…	…	37.5	19.5	11	7	2	4	15.5	12
50 g	…	…	28.5	22.5	9.5	6	1.5	3	10.5	10
20 g	…	…	21.5	17.5	8	4	1.5	2.0	7	8
10 g	…	…	16.5	13.5	..	..	1	1.5	6	..
5 g	…	…	12.5	10.5	..	..	1	1	5	..
2 g	…	…	10	8	..	..	0.5	1	4	..
1 g	…	…	7.5	..	..	..	..	..	2.5	..

Alt dimensions in millimeters.
Tolerance on dimensions ± 10 per cent

4.2. ***Material***.—The Weights shall be made of cast brass or cast Bronze or processed from brass rods. The cast brass or brass rods may preferably conform to grade 3 of BS 044—1941 and to BS 1949—193 respectively. Cast Bronze may preferably conform to grade 2 of BS 1400—1948.

4.3. Method of manufacture.—Any method appropriate to the material Chosen.

4.4. ***Shape.***

4.4.1. Weights of denominations of 10 kg and down to and including 1 g shall be cylindrical in shape with a handle for 20 kg and 10 kg weights and a knob for the rest of the denominations. Shapes and dimensions shall conform to figure 4 and 5 read with table IV and V respectively. Weights of 20 kg and down to including 200 g shall be marked with the denomination of Arabic numerals in Latin Script and kilo and gram in Urdu with a diamond as shown in figure 4 and 5 and weights of 100 g and down to and including 10 g shall be marked with only a diamond.

4.4.2. Weights of denominations of 1 kg and down to and including 1 g shall be flat cylindrical in shape (without a knob) and shall nest with each other. Shapes and dimensions shall conform to figure 6 read with table VI. Weights of 1

kg and below down to and including 20 g shall be marked with the denomination of Arabic numerals and kilo and gram in Urdu and English within a diamond as shown in figure 6 and weights of 10 g and blow down to and including 1 g shall be marked with only a diamond.

4.5. Adjusting cavity.—Weights of denominations of 10 kilogram and down to including 20 g shall have a round loading hole tapering outwards in the centre of the underside.

4.6. Permissible margin error:

Denomination		Permissible margin of error (mg)
20 Kg	… … … … … … … …	± 5000
10 Kg	… … … … … … … …	± 2500
5 Kg	… … … … … … … …	± 1500
2 Kg	… … … … … … … …	± 800
1 Kg	… … … … … … … …	± 500
500 g	… … … … … … … …	± 300
200 g	… … … … … … … …	± 200
100 g	… … … … … … … …	± 160
50 g	… … … … … … … …	± 120
10 g	… … … … … … … …	± 100
20 g	… … … … … … … …	± 80
5 g	… … … … … … … …	± 60
2 g	… … … … … … … …	± 40
1 g	… … … … … … … …	± 20

5. Sheet Metal Weights

5.1. ***Denomination*.—**The denomination of sheet metal weights shall be 500, 200, 200. 100, 50. 20, 20, 10, 5, 2, 2, 1 mg.

5.2. ***Material***.—Sheet metal weights shall be made of stainless steel, aluminum, brass or nickel silver sheets. The aluminum and brass sheets may preferably conform respectively to BS Designation NS 3 of BS: 1470— 1955 and Grade 4 of BS: 713—1836.

5.2.1. Nickel silver sheets.—Nickel silver sheet should preferably have the following composition;

Constituent	… …	Per cent by weight
Copper	… …	63.0 to 66.5
Nickel	… …	17.5 to 19.5
Zinc.	… …	Remainder

5.22. Stainless steel sheet. — stainless steel sheet should preferably conform to the following composition:-

Constituent			Per cent by weight
Carbon, maximum	…	…	0.16
Silicon, minimum	…	…	0.20
Manganese, maximum	…	…	2.00
Nickle	…	…	7.0 to 10.0*
Chromium	…	…	17:0 to 20.0*
Sulphur, maximum	…	…	0.045
Phosphorus maximum	…	…	0.0.45

*Nickel plus chromium not less than … 25.00 per cent.

5.3. *Shapes and dimension.*

5.3.1. Other than bullion weights.—After bending along one of the sides (see Fig. 7) the weights shall have the dimensions given in Table VII and the following shapes: —

Denomination (mg)			Shape	
500,50,5	…	…	…	Hexagon
200,20,2	…	…	…	Square
100,10,1	…	…	…	Triangle

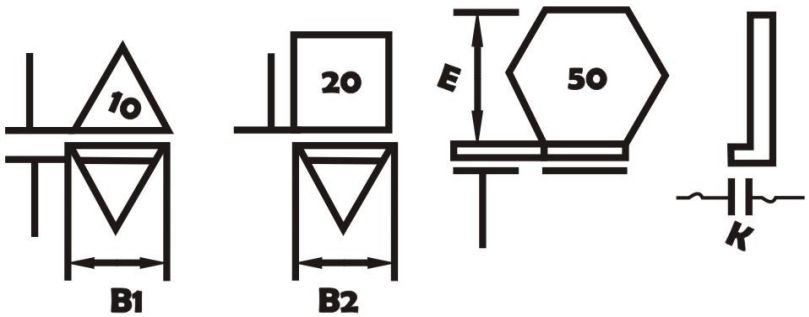

Fig. 7. Sheet Metal Weights.

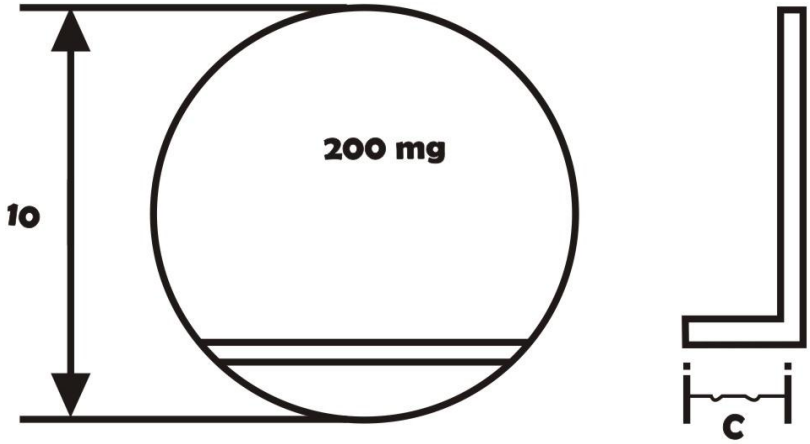

Fig. 8. Sheet Metal Bullion Weight.

TABLE VII.—DIMENSIONS OF SHEET METAL WEIGHTS

Denomination (mg)	B1	B2	B3	H	C
500	..	..	12	4	2
200	..	9.0	..	3.5	2
100	9.0	..	..	3.5	2
50	..	..	9.0	3	1.5
20	..	6.4	..	2.5	1.5
10	6.4	..	..	2	1.5
5	..	..	6.3	2	1
2	..	3.6	..	2	1
1	3.6	..	..	2	1

All dimensions in millimeters.
Tolerance on dimensions ± 10 per cent.

TABLE VIII—DIMENSIONS OF SHEET METAL WEIGHTS (BULLION)

Denomination (mg)	D	C	H
500	11.0	2	2
200	10.0	2	2
100	9.0	2	2
50	8.0	1.5	2
20	6.3	1.5	1.6
10	5.6	1.5	1.6
5	5.0	1.0	1
2	4.0	1.0	1.0
1	3.2	1.0	1.0

All dimensions in Millimeters.
Tolerance on dimensions — 10 per cent.

5,3.2. *Bullion Weights*.—When intended for use in the bullion trade, sheet metal weights shall, after bending, have circular shape, their diameters shall be as given in Figure 8 read with table VIII.

5.4 *Permissible errors.* – The errors in excess permissible for new weights shall not exceed the following limits:-

Denomination (mg)	Other than bullion weights (mg)	Bullion weights (mg)
500	8.0	1.6
200	6.0	1.2
100	4.0	0.8
50	2.0	0.4
20	2.0	0.4
10	1.0	0.2
5	0.4	0.2
2	0.2	0.2
1	0.1	0.1

5.4.1. The maximum permissible error in deficiency for used weights shall not exceed 50- per cent of the values prescribed for permissible errors in excess.

5.4.2. The deficiency figures are only for the information of users of weights and that the permissible error on new weights shall be only on the excess side.

6. Manufacture and finish:

6.1. General—When the weights are cast, the castings shall be reasonably smooth, free from dross, pits, blow-holes and other defects. When weights are made by machining or forging, the surface shall be reasonably smooth. Sheet metal weights shall be clearly sheared and shall be free from burrs. Cast iron and forged weights shall be coated with a. thin film of suitable black paint or varnish.

6.2. The raised markings on weights shall be clean and legible. The stamped markings on sheet metal weights shall be legible and deep enough to ensure indelibility over a long period, but not so deep as to crack the sheet.

6.3. When lead is used in adjusting weights, it shall be so fitted as to ensure that it does not dislodge itself under normal conditions of use.

6.4. The steel handles of cast iron weights shall be rigidly fixed.

7. Marking.

7.1. Every weight, except weights of 10 kg and lower denominations, shall have the name of the manufacture his initial or trade mark indelibly cast or stamped on it.

7.2. The denomination on the weights shall be indicated in Urdu, and English in an indelible manner, with the abbreviations ‘kg’ to indicate kilo. gram, ‘g’ to indicate gram, and. ‘mg’ to indicate milligram. The numerals. used shall only be in Arabic figures and the size of numerals and letters (letters need not be stamped on weights of 50 mg and below and on, bullion weights, with knobs, of denominations of 5 g and below) indicating denominations of weights shall be at least twice the size of letters indicating the same or trade-mark of the manufacturer.

8. Adjustments.—The weights provided with loading holes shall be adjusted by pouring the required weight quantity of moltan lead into the loading hole and pressing the lead firmly. The approximate distance of the lead from the surface shall not be less than 20 per cent of the maximum thickness of the weight when new. The lead used for adjusting may preferably conform to Grade per cent of BS: 334-1934.

PART-II

COMMERCIAL CARAT WEIGHTS

1. Denominations.

1.1. The denominations of the carat weights shall be as given below (the gram and milligram equivalent are shown against each for ready reference)

1.1.1. Knob Weights.

Denomination Carat (c)						Equivalent (g)
500	…	…	…	…	…	100
200	…	…	…	…	…	40
100	…	…	…	…	…	20
50	…	…	…	…	…	10
20	…	…	…	…	…	4
10	…	…	…	…	…	2

5	…	…	…	…	…	1

1.1.2. Sheet Metal Weights.

Denomination Carat (c)						Equivalent (mg)
2	…	…	…	…	…	400
1	…	…	…	…	…	200
50/100	…	…	…	…	…	100
20/100	…	…	…	…	…	40
10/100	…	…	…	…	…	20
5/100	…	…	…	…	…	10
2/100	…	…	…	…	…	4
1/100	…	…	…	…	…	2
0.5/10	…	…	…	…	…	1

2. Knob Weights.

2.1. *Denominations*.—The denominations of different types of knob weights shall be the same as laid down in paragraph 1.1 .1.

2.2. *Materials.*

2.2.1. The weights shall be made from rolled drawn or extruded material and shall not be cast.

2.2.2 The weights shall be made from brass, bronze, nickel, silver non-magnetic nickel chromium or non-magnetic stainless steel which may preferably conform to the following:--

(a) Brass — BS: 1949—1963

(b) Bronze:-

Constituent						Per cent
Copper	…	…	…	…	…	889.0 to 91.0
Tin	…	…	…	…	…	Remainder
Impurities						
Lead, maximum	…	…	…	…	…	0.05
Iron maximum		…	…	…	…	0.05
Other (total), maximum		…	…	…	…	0.13

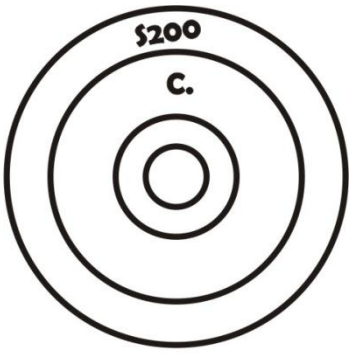

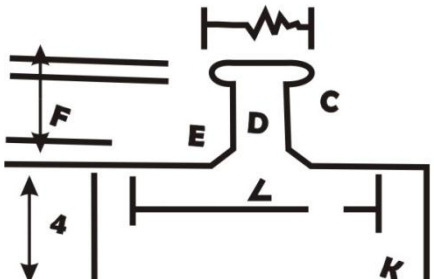

(c) Nickel Silver:

Constituent		Per cent.
Copper	…	63.0 to 66.5
Nickel	…	17.5 to 19.5
Zinc	…	Remainder
Impurities	…	
Iron, Maximum	…	0.25
Manganese, maximum	…	0.50
Lead Maximum	…	0.05

(d) Non-magnetic Nickel Chromium:

Constituent		Percent.
Carbon, maximum	…	0.10
Manganese, maximum	…	0.50
Chromium	…	19.0 to 21.0
Silicon, maximum	…	0.80
Copper, maximum	…	0.20
Iron, maximum	…	1.20

(e) Non-magnetic Stainless Steel:

Constituent	Percent
Carbon, maximum	0.08
Silicon	0.02

Table 1. – Nominal Dimensions of Knob Carat Weights.

(All dimensions in mm).

Denomination (Carat) (c)		A	B	C	D	E	F	G	H	K	L
500	… … …	12	2.5	1.25	5.0	1.5	8.0	33.2	13.26	0.40	
200	… … …	10	2.2	1.10	4.5	1.5	6.5	24.4	9.60	0.30	
100	… … …	9	2.0	1.00	4.0	1.0	6.0	19.1	1.63	0.30	
50	… … …	8	1.8	090	3.5	1.0	5.5	15.0	5.95	0.25	
20	… … …	7	1.7	0.85	3.0	1.0	5.0	10.8	4.13	0.25	
10	… … …	6	1.6	0.80	2.5	1.0	4.5	8.2	3.26	0.20	
5	… … …	5	1.5	075	2.0	1.0	4.0	6.3	2.49	0.20	

Note – The above nominal dimensions are related to a material with a density of 8.4 g/cc. To take into account variations in materials and manufacturing practices, a tolerance of ±5 per cent is permitted on the obligatory dimensions (that is, other than C, E and K).

2.3 *Shape and dimension*. —The shape and dimensions of the weights shall be as shown in figure 1 and table 1.

2.4 *Permissible error.* —The errors in excess for new weights shall not exceed the following limits. No errors in deficiency shall be permitted.

Denomination Carat (c)				Permissible error in excess (mg)
500	…	…	…	8
200	…	…	…	6
100	…	…	…	5
50	…	…	…	4
20	…	…	…	3
10	…	…	…	2
5	…	…	…	1

2.4.1 The maximum permissible errors in deficiency for use weight shall not exceed 50 per cent of the values prescribed for permissible errors in excess.

2.4..2 It should be noted that the deficiency figures are only for the information of user of weights and that the permissible error on new weights shall be only on the excess side.

3. Sheet metal weight.

3.1 Denomination. – The denominations of different types of sheet metals weights shall be as laid down in paragraph 1.1.2

3.2 Materials – Weights of denominations 2’100 carat and below shall be made of aluminum sheet which may preferably conform to NS 3 of BS: 1470-1955. Weights of higher denominations shall be made of sheets of brass aluminum, nickel silver, nickel chromium or bronze, which may preferably conform to the following:

3.2.1. Brass —Grade 4 of BS: 713-1936
3.2.2. Bronze —As in 2.2.2. (b)
3.2.3. Nickel silver — As in 2.2.2. (c)
3.2.4 Non-magnetic Nickel Chromium —As in 2.2.2 (d)
3.2.5. Non-magnetic stainless steel —As in 2.2.2. €.
3.2.6. Aluminum—BS 1470-1955.

Constituent		Per cent.
Manganese, Maximum	…	2.00
Nickel	…	8.0 To 11.0
Chromium	…	17.5 to 20.0
Sulphur, Maximum	…	0.045
Phosphorus, maximum		0.045

3.3. Shape and Dimensions. –Sheet metal weights shall be square with a raised corner to facilitate manipulation (see Fig 2). They shall have the dimensions give in Table II.

Fig 2.

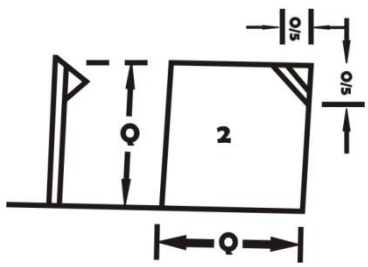

Fig. 2 – sheet Metal Carat Weight

Table If Nominal Dimension of Sheet Metal Carat Weights.

Denomination Carat (c)							Size (a) mm
2	…	…	…	…	…	…	12
1	…	…	…	…	…	…	10
50/100	…	…	…	…	…	…	9
20/100	…	…	…	…	…	…	8
10/100	…	…	…	…	…	…	7
5/100	…	…	…	…	…	…	6
2/100	…	…	…	…	…	…	5
1/100	…	…	…	…	…	…	4
0.5/100	…	…	…	…	…	…	3
Tolerance							±10 percent

3.4. Permissible errors. --The errors in excess for new weights shall not exceed the values given below. No errors in deficiency shall be permitted.

Denomination Carat (c)							Permissible Error in excess
(c)							mg
2	…	…	…	…	…	…	0.8
1	…	…	…	…	…	…	0.6
50/100	…	…	…	…	…	…	0.4
20/100	…	…	…	…	…	…	0.2
10/100	…	…	…	…	…	…	0.2
5/100	…	…	…	…	…	…	0.1
2/100	…	…	…	…	…	…	0.1
1/100	…	…	…	…	…	…	0.1
0.5/100	…	…	…	…	…	…	0.1

3.4.1 The maximum permissible errors in deficiency for used weights shall not exceed 50 per cent of the values prescribed for permissible errors in excess.

3.4.2. It should be noted that the deficiency figures are only for the information of users of weights and that the permissible errors on new weights shall be only on the excess side.

4. Manufacture and finish.

4.1. The surface of the weights shall be reasonably smooth. Sheet metal weights shall be smoothly sheared and shall be free from burrs.

4.2. For better durability and finish, the weights may be nickel, chromium, gold or rhodium plated.

5. Marking.

5.1. Every weight, except weights of 50 carat and lower denominations, shall have the manufacturers name, initial or trade mark and the denomination indelibly stamped on it.

5.2. The denomination shall consist of the Arabic numerals in Latin Script, ‘kilo’ and ‘gram’ in Urdu within a diamond, except that in the case of weights below 50

carat, only the numerals shall he marked. The size of numerals and letters indicating denominations of weights shall be at least twice the size of letters indicating the manufacturer's name or trade mark.

5.3. The marking shall be legible and deep enough to ensure indelibility over a long period of use.

6. Packing.

6.1. Each set of carat weights shall in addition to the series of denominations specified under paragraph 2, consist of an additional piece of weight of the relevant decimal multiple of two.

6.2. The weights shall be supplied in a suitable velvet-lined box. The small sheet metal weights shall be so housed and provided with a cover of glass or any other transparent material so that they will not get dislodged from their proper places. The box shall also contain a pair of forceps for lifting the weights.

PART III—COMMERCIAL LINEAR MEASURES

(non-flexible)

1. General.

1.1. This part deals with the non-flexible type of commercial length measures made of metal or wood. Metallic measures are usually used for measuring textiles, ribbons and similar materials and wooden measures generally in the timber trade.

2. Denominations.

The denominations of the length measures shall be as follows:

Metallic measures wooden measures.

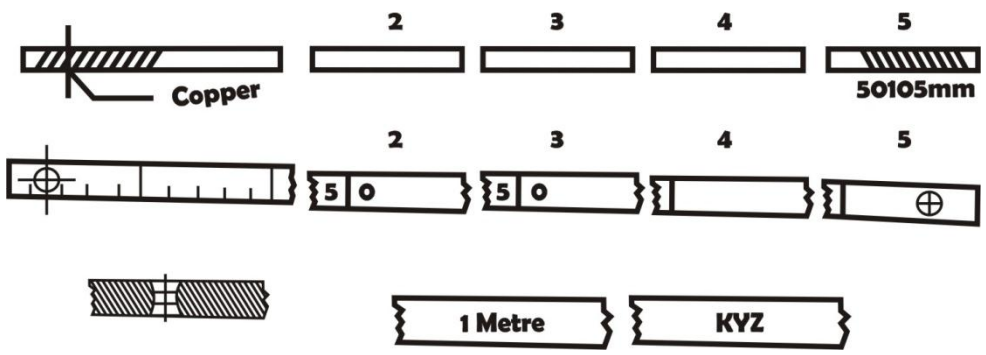

Enlarge view of reverse side.

Fig: 1

2.1 Metallic measures.

2.1.1. *Materials* – The measures shall be made of mild steel or brass plated with nickel and chromium or of stainless steel. The mild steel rods and brass bars may preferably conform to Designation B of IS: 226—1955 and Grade A of IS: 319—1951 respectively.

2.1.2. *Shape and Dimensions*. – The shape and dimensions of the measures shall be as shown in Fig. I.

2.1.3 *Graduation* – the graduation marks shall be made at every centimeter for the first ten centimeters and thereafter at every five centimeters. The graduation marks every ten centimeters shall be numbered. The Marks at the centimeter divisions shall extend over half the breadth and those at five centimeters divisions over full breadth of the measures. A cross mark shall be provided at 25 centimeters in the case of 0.5 m measures and at 25, 50 and 75 cm in the case of 1 m measure (see Fig. 1). The graduations shall be only on one side of the measures.

2.1.4 *Limits of error to be tolerated* – the mark at every five centimeters shall not exceed or be deficient by more than 0.25 mm, and further the error from the beginning of the measure to any link mark shall not shall not exceed the following limits:--

					Verification		Inspection	
Denomination					**Excess**	**Deficiency**	**Excess**	**Deficiency**
1 m	**…**	**…**	**…**	**…**	**1.0 mm**	**0.5 mm**	**1.0 mm**	**0.5 mm**
0.5 m	**…**	**…**	**…**	**…**	**0.5 mm**	**0.25 mm**	**0.5 mm**	**0.5 mm**

21.5: *Provision for stamping*__The measures shall be provided with a copper rivet near each end (see Fig. 1) firmly fixed in a hole, countersunk on both sides, for the Inspector's stamp. An arrow head shall be marked at each end of the measure to provide the points for checking the length.

2.2. Wooden Measures.

Materials.—The measures shall be made from well seasoned timber of any one of the following species —

i. Teak (Tectona grade Linn. F).
ii. Rosewood (Dalbergia Latifalia Roxb).
iii. Shisham (Dalbergia sissoo Roxb).
iv. Haldu (Adhina cordifolia Hock, F).
v. Bijasal (Pterocarous maruspius Roxb).
vi. Boxweed (Buxux sempervirens).
vii. Beech (Fagus svlvatica).

2.2.1. *Shape and dimension*.-—the shape and dimensions of the measures shall be as shown in Fig 2.

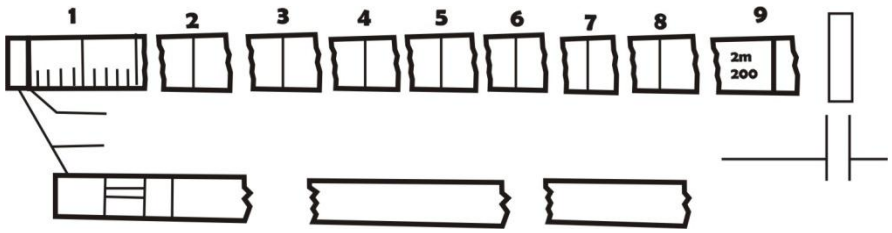

2.2.2. *Graduation.*—The graduation marks shall be made at every centimeter for the first ten centimeters and thereafter at every five centimeters. The graduation marks at every ten centimeters shall be numbered. The marks at the centimeter divisions shall extend over half the breadth and those at the five centimeter division over the full breadth of the measures. A cross mark shall be provided at every 25 cm, excluding the one meter and two meter graduation (see Fig. 2). The graduations shall be on one side of the measures only.

2.2.3. *Limits of error to be tolerated*.—The mark at every five centimeters shall not exceed or be deficient by more than 1 mm, and further the error from the

beginning of the measures to any line mark shall not exceed 2 mm. provided that the errors on the full length of the measure shall not exceed the following limits.

Denomination	Verification		Inspection	
	Excess	Deficiency	Excess	Deficiency
2 m … … … …	4 mm	2 mm	4 mm	4 mm

2.2.4. *Provision for Stamping*.—Each measure shall be provided at each end with a metal tip not less than 1 cm in width, security riveted with two rivets at each end, as shown in Fig. 2, for receiving the Inspector's stamp. The width of the tips shall be included in the total length of the measure.

3. Manufacture and finish.

3.1. The measure shall be evenly finished and shall be reasonably straight.

3.2. In the case of metallic measures, the graduation marks and the cross marks shall be legible and deep enough to ensure indelibility over a reasonably long period of use, but not so deep as to make the measures liable to be easily bent. In the case of wooden measures, the marking shall be finished neatly sharply and legibly, in a color contrasting with the wood finish. They shall be visible from a distance and shall remain indelible over a reasonably long period of use.

4.1. The denomination shall be stamped, on the un-graduated side of the, measure at about one-third of the total length from the beginning of the measure and the manufacturer's name or trade mark at a similar distance from the end of the measure. In the case of wooden measures, the markings shall be finished in the same manner as the graduation.

4.2. The denomination shall be given in Arabic numerals preceded by the word'میٹرand succeeded by the word 'meter'. The size of numerals and letters indicating denominations of measures shall be twice that of the letters indicating the manufacturer's name or trademarks.

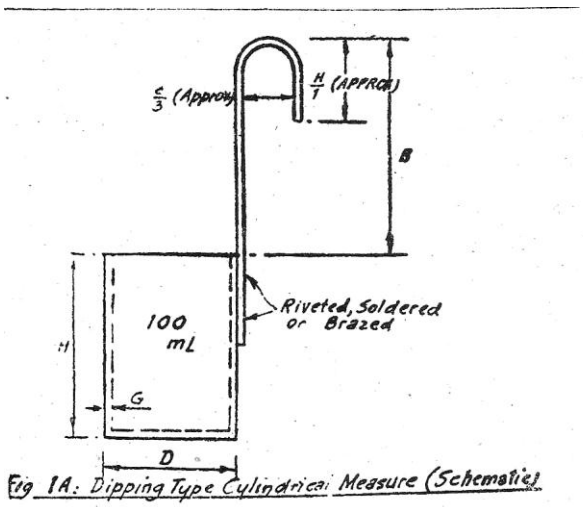

Fig 1A: Dipping Type Cylindrical Measure (Schematic)

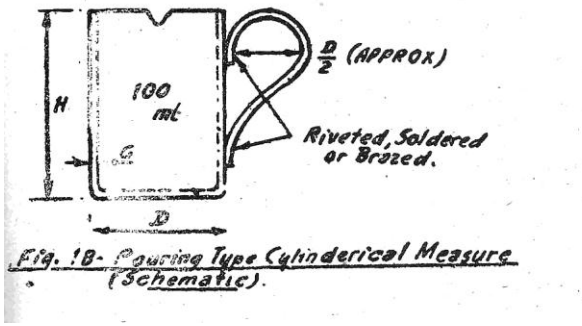

Fig. 1B- Pouring Type Cylinderical Measure (Schematic).

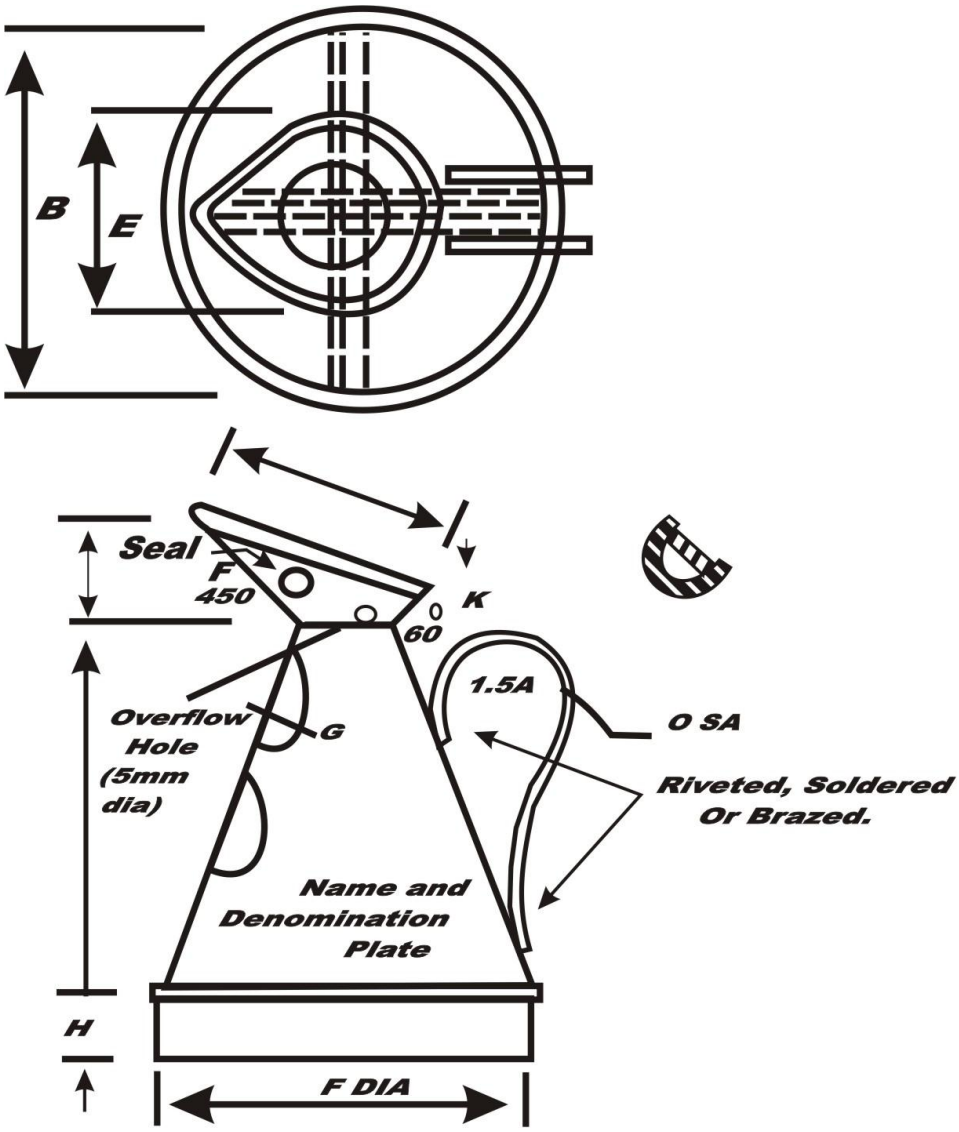

Fig. 2. Pouring Tope Conical Measure
(Schematics)

PART IV — COMMERCIAL LIQUID CAPACITY MEASURES

1. Scope.

This standard prescribes the requirements for capacity measures of cylindrical and conical shapes intended for use in normal commercial transaction. These measures are intended for measuring liquid only.

2. Types and shapes.

2.1. Cylindrical measures shall be of the dipping and pouring types and shall have the shapes as illustrated in Fig: 1A and Fig. 1B respectively.

2.2. Conical measures, which are of the pouring type, shall have the shape as illustrated in Fig. 2.

3. Denominations.

The denominations of the different types of measures shall be as follows: —

Cylindrical Measures	Conical measures	
Dipping type	Pouring type	
I Liter	2 Liters	20 Liter
500 ml	I Liter	10 Liters
200 ml	500 ml	5 Liters
100 ml	200 ml	2 Liters
50 ml	100 ml	1 Liter
20 ml	50 ml	500 ml
	20 ml	200 ml
		100 ml

4. Material.

4.1. Cylindrical measures.—The body of cylindrical measures shall be pressed from aluminum alloy sheets, brass sheets or stainless steel sheets, as may be specified by the purchaser. The minimum thickness of the sheets shall be as specified in Table 1. The aluminum alloy sheets may preferably conform to NS 3 of BS: 1470-—I 955 specification for wrought aluminum and aluminum alloys, sheet and strip (for general engineering purposes) and bass sheets to Grade BS: 713—1936 speciation for rolled brass plate, sheet, stripe and foil respectively.

TABLE 1.—NOMINAL DIMENSIONS OF CYLINDRICAL

CAPACITY MEASURES

Denomination	D	H	B	K	G
			Maximum	Minimum	Minimum
2 Liters … … … …	120	180	360	250	1.60
I Liter … … … …	95	142	254	210	1.60
500 ml … … … …	75	1.4	224	160	1.60
200 nil … … … …	55.5	83	166	120	1.25
100 ml … … … …	44	66	132	100	1.25
50 ml … … … …	35	52	104	80	1.25
20 ml … … … …	26	38	76	60	1.00

Note 1 .— All dimensions in millimeters.
Note 2.—Tolerance on dimension ± 10 per cent.

4.2. Conical measure.—The conical measures shall be fabricated from galvanized steel sheets, aluminum alloy sheets copper sheets, brass sheets, stainless steel sheets or tin plate by the purchaser. The minimum thickness of the sheets shall be as specified in Table II. The galvanized steel sheets, aluminum alloy sheets, brass sheets and tin-plate may preferably conform. to Class I of BS: 3033—1959 Specification for galvanized steel sheets (plain and corrugated), NS 3 of BS: 1470—1955 Specification for wrought aluminum and aluminum alloys, sheet and strip (for general engineering purposes) Grade BS 60 of BS: 713—I 936 Specification for rolled brass plate, sheet, strip, and foil and grade brass plate, sheet, strip, and foil and grade 1 (CI) BS: 2980—1957 Specification for black plate for tinning, and tinning and tin-plate respectively.

4.3. The handles for the measures shall be fabricated from the same material as that used for the body.

5. Dimensions.

5.1. The nominal dimensions of conical measures shall conform to Fig. 1 read with Table I and Fig. 2 read with Table II, respectively.

TABLE 11.—NOMINAL DIMENSIONS OF CONICAL CAPACITY..

Denomination		A	B	C	D	E	F	G Min	H	J	K	M
20 Liters	..	97	388	388	208	194	390	I .00	35	86	29	30
10 Liters	..	77	308	307	174	154	309	1.00	30	75	26	25
5 Liters	..	61	244	245	147	122	247	0.80	25	65.5	24	2
2 Liters	..	45	180	180	118	90	182	0,80	20	56	22	16’
1 Liter	..	36	143	143	95.5	72	145	0.63	20	45	18	16
500 ml	..	28	114	113	74	56	116	0.63	15	35	14	12
200 ml	..	21	84	84	53	42	86	0.63	10	24.5	10	8
100 ml	..	17	66	67	41	34	69	0.63	10	18.5	7	8

Note. 1— All dimensions in millimeters.

Note. 2— Tolerance on dimensions ±5 per cent for 20 Liters and 10 Liters and ± 10 Liters and ± per cent for Liters and below.

6. Manufacture.

6. 1. Measures made of brass sheet and copper sheets shall be well tinned, preferably with pure tin, uniformly all over the inside as well as the outside surface.

6.2. The bandies shall be of robust construction and shall be well formed and generally shaped as shown in Fig. I and Fig. 2. They shall be securely fixed to the body by means of riveting, welding, soldering or brazing.

Note. 1 — Capacity Measures when used for measuring milk shall have the handle fixed either by welding, soldering or brazing so as not to provide any pockets for accumulation of dirt and unhygienic materials.

Note. 2— Dipping type of cylindrical measures may have the handle substituted by two suitable but diagonally opposite brackets affixed to the walls of the measure by means of soldering, brazing of welding so” as ,to hold the measure properly by a handle, at right angle; to the walls of the measure to facilitate its use in hot and boiled milk trade.

6.3. The measures shall be free from any surface defects and indentations and shall be smoothly finished.

6.4. Cylindrical measures shall be provided with a well pored and proportioned so put to facilitate pouring.

6.5. Conical measures shall be provided with a retaining lip to avoid spilling. The retaining lip shall be provided with a brass plug with a collar to receive the lead seal which shall be stamped by the Inspector at the time of verification and periodic inspection. A small hole. about 5 mm in diameter, shall be .provided at the bottom of the retaining lip to indicate the level to which the measure shall be filled and the hole shall be located on the side at right angles to the’ handle.

6.6. The measures shall be so designed that when they are titled 120 degrees from the vertical, they shall become completely empty.

7. Permissible errors in capacities.

7.1. The permissible errors in excess shall not exceed the limits given below. No errors in deficiency shall be permitted.

Denomination								Permissible Errors in Excess	
								Cylindrical Measures	Conical Measure
								(ml:)	(ml:)
20 Liters	…	…	…	…	…	…	…	..	100
10 Liters	…	…	…	…	…	…	…	..	50
5 Liters	…	…	…	…	…	…	…	..	30
2 Liters	…	…	…	…	…	…	…	30	15
1 Liters	…	…	…	…	…	…	…	20	10
500 ml	…	…	…	…	…	…	…	15	8
200 ml	…	…	…	…	…	…	…	8	4
100 ml	…	…	…	…	…	…	…	5	3
50 ml	…	…	…	…	…	…	…	3	…
20 ml	…	…	…	…	…	…	…	2	…

8 Marking.

8.1. Every cylindrical measure. shall have the denomination and manufacturer's name or registered trade-mark legibly and indelibly stamped on ft. In the case of conical measures, the denomination and manufacturer's name or trademarks shall be either embossed on the body or indelibly marked on a name-plate securely fixed to the body.

8.2. The denomination shall consist of Latin Arabic numerals and the abbreviation T to indicate Liter and 'ml' to indicate millimeter. The size of letters indicating denominations on the measures shall be twice the size of letters indicating the manufacturer's name or trade-mark.

PART IV.-- -DISPENSING MEASURES

1. General

1.1. This Part deals with two types of dispensing measures made of glass and transparent plastic materials used for dispensing purposes.

2. Types and denominations.

2.1. Dispensing measures shall be of the following types and denominations: —

2.1.1. Conical measures.-—200 ml, 100 ml, 50 ml, 20 ml, 10 ml and 5 ml.

2.1.2. Beaker measures—1000 ml and 500 ml.

3. Materials.

3.1. *Glass measures*.— The measures shall be made of clear and transparent glass. They shall he well annealed: free from stones, cracks and chippings; and as free as possible from blisters and other defects. Lead glass shall not be used for the measure.

3.2. *Transparent plastic measures*.— The measures shall be made of clear and transparent plastic materials, manufactured from plasticized polyvinyl chloride or copolymer, the major constituent of which is polyvinyl chloride. The plastic material used shall not contain any constituents known to be injurious to health and likely to be extracted by contract with liquids.

4. Definition of capacity.

4.1. The capacity corresponding to any graduation mark is defined as the volume of water at 27° C, expressed in milliliters, required to fill the measures to that graduation mark at 27° C. the observer's being at level with the front graduation mark and the lowest point of the water meniscus appearing to touch the top edge of that mark.

5. Conical measures.

5.1. Shape.—The measures shall be conical as shown in Fig. 3A to 3G; the 50 ml. measures shall be either tall or squat as shown in Figs. 3C and 3D respectively.

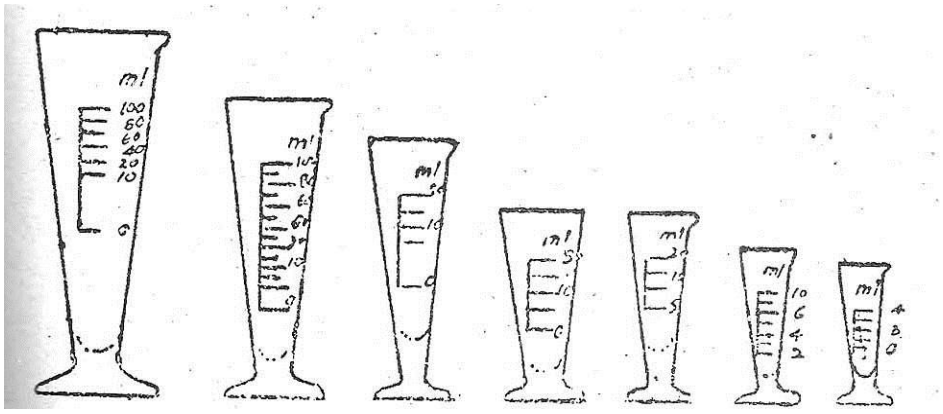

Conical Dispensing Measures of SI Services- Tall and Squat Types Fig 3A Fig. 3B Fig. 3C Fig. 3D Fig. 3E Fig. 3G 200 ml 100 ml 50 ml (Tall) 50 ml 20 ml 10 ml 5 ml (squat.

Fig 10 - Conical Measures.

5.2 *Constructions.*

5.2.2. Each measures shall have a Pouring lip. The form of the lip shall be such that when the measure is filled with water to the highest graduation mark, the contents may be poured from the lip in a stream falling clear of the outside of the measures.

5.2.2. Each measures shall have a base on which it shall stand vertically without rocking when placed on horizontal surface. The Size of the base shall be such that the measure when empty, shall not fail when placed on a plane inclined at 15° to the horizontal. The bottom of the measuring space shall be uniformly rounded and merge smoothly into the sides of the measures.

5.2.3. The wall thickness of the measures shall be sufficient to ensure study construction and shall not show any local departures from uniformity.

5.2.4. The external surface of the measures shall he a cone having an included angle of not less than 13° and not more than 14°.

5.2.5. The overall volume of the measure shall be such when it is filled with water to the highest graduation mark and a volume of water equal to half its nominal capacity is added to it, there shall be no overflow. But the addition of a further quantity of water equal to quarter the nominal capacity shall result in water overflowing from the pouring lip.

5.3. Graduation,

5.3.1. The conical measures shall be, graduated in accordance with Table.1.

TABLE III.--DETAILS OF CONICAL MEASURES

Denomination	Graduated At	Numbered	Back Lines At	Lowest Graduation Mark	Height of Lowest Graduation Mark above Bottom of Measuring space.	Minimum length of Mark
1	2	3	4	5	6	7
ml	ml	ml	ml	ml	cm	cm
200	50, 100, 120,140, 160,180, 200	50, 100, 120 140, 160, 180 200	50, 100, 200	50	6.5 + 0.5	2.0
100	Every 10 ml from 10 to 100 ml	10, 20, 40. 60, 80, 100.	20, 60, 100	10	3.0 + 0.5	1.75
50 (tall)	Every 10 ml from 10 to 50 ml	10, 30, 50	30, 50	10	4.5 + 0.5	1.5
50 (Squat)	Every 10 ml from 10 to 50 ml	10, 30, 50	30, 50	10	2.0 + 0.5	1.5
20	Every 5 ml from 5 to 20 ml	5, 10, 20	10, 20	5	2.5 + 0.5	1.25
10	Every 1 ml from 2 to 10 ml Every 1 ml from 5 ml	2, 4, 6, 8, 10 1, 3, 5.	2, 6 , 10 3, 5	2 1	2.5 + 0.5 2.5+0.5	1.0 0.73

5.3.2. With the pouring lip of measure facing to the right, the front graduation marks shall be placed at right angles to and on the right hand side of a vertical line extending from above the top graduation mark to near the base of the measure and below the bottom graduation mark.

5.3.3. The graduation marks shall be marked as shown in Fig. 3A to 3G. The marks shall be engraved or etched and they shall be of a uniform thickness not exceeding 0.3 mm. provided that they may taper slightly towards the ends. The graduation marks shall lie in planes perpendicular to the axis of the measure and shall be horizontal when the measure is standing on a horizontal surface.

5.3.4. Each graduation number shall be etched or engraved close to the end of the graduation mark to which it relates and in such a manner that it would be bisected by a prolongation of that graduation mark.

5.3.5. The numbered graduation marks shall have the minimum length specified in column 7 of Table Ill. The unnumbered graduation marks shall be at least two-third the length of the numbered graduation marks and clearly shorter than the numbered marks.

5.3.6. The height of the lowest graduation mark above the lowest point of the bottom of the measuring space shall be within the limit given in column 6 of Table .111.

5.3.7. *Limits of error be tolerated*. The limits of error to be tolerated in capacity shall not exceed the figures given below. The permissible errors in excess or deficiency shall be the same for verification or inspection.

TABLE IV.—PERMISSIBLE ERRORS IN CAPACITY OF CONICAL MEASURES.

Capacity corresponding to graduation Mark measures except 50 ml (Squat) Measure (Squat)						
200,180,160	…	…	…	…	3.0	…
140, 120, 200	…	…	…	…	2.0	…
90,80,70,60	…	…	…	…	1.5	…
50,40 …	…	…	…	…	1.0	1.0
30 ...	…	…	…	…	0.8	1.0
20 ...	…	…	…	…	0.6	0.8
15 ...	…	…	…	…	0.5	…
10, 9 ...	…	…	…	…	0.4	0.6
8,7,6 …	…	…	…	…	0.3	…
5 ...	…	…	…	…	0.25	…
4 ...	…	…	…	…	0.20	…
3 ...	…	…	…	…	0.16	…
2 ..	…	…	…	…	0.12	…
1 …	…	…	…	…	0.80	…

Note.— The permissible errors, apart from those of 50 ml (squat) measure, apply to graduation marks corresponding to the capacity stated; irrespective of the nominal capacity of the conical measure concerned.

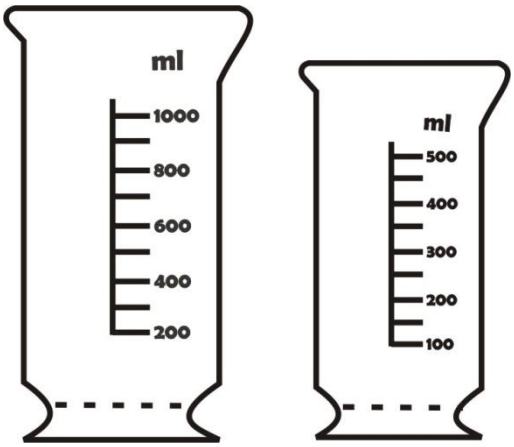

Fig 4A —1000 ml Fig . 4B – 500 ml

Fig 4. – Beaker Measures

6. Beaker Measures.

6.1. *Shape*.—The measures shall he in the form shown in Fig. 4A and 4B

6.2. *Construction*— -

6.2.1. Each measure shall be provided with a pouring lip. The form of the lip shall be such that, when the measure in filled with water to the highest graduation mark, the contents may be poured from the lip in a steam falling clear of the outside of the measure.

6.2.2. Each measure shall be provided, with base on which it shall stand vertically without rocking when placed on a horizontal surface. The side of the base shall be such that the measure, when empty, shall not fall when placed on a plane inclined at 15 to the horizontal. The bottom the measuring space shall be uniformly rounded and shall merge smoothly into the side of the measure.

6.2.3. The overall volume of the measure shall be such that when the measure is filled with water to the highest graduation mark and a volume of water equal to quarter the denomination volume is added to it, the water shall not overflow

6.3. *Graduation.*

6.3.1 The graduation marks shall, be marked as shown in Fig. 4A and 4B and Table V. The marks shall be etched or engraved and, shall be of a uniform thickness not exceeding 0.3 'mm provided that they may taper slightly towards the ends. The graduation marks shall -lie in plans perpendicular to the axis of the measure and shall be horizontal when the measure is standing on a horizontal surface.

6.3.2. Each graduation' number shall be etched or engraved close to the end of the graduation mark to which it is related and in such a manner that it would be bisected by a prolongation of that graduation marks.

6.3.3. The distance between the highest and lowest graduation marks and the height of the lowest graduation mark above the inside of the base of the measure shall be in accordance with columns (3) and (4) respectively of Table V.

TABLE V.—GRADUATION AND DIMENSIONS OF BEAKER MEASURES.

Denomination	Graduation At,	Distance between lowest and highest graduation Marks.	Height of lowest graduation Mark above bottom of measuring of surface.	Diameter of top	Minimum diameter of base.	Overall height.
(1)	(2)	(3)	(4)	(5)	(6)	(7)
ml		cm	cm	cm	cm	cm
100	20 to 1000 ml at each 100 ml numbered at each 200 ml nu-numbered back lines at 200, 600 and 100 ml.	11 + 1	4 + 2	12	9	23
500	100 to 500 ml at each 50 ml numbered at each 100 ml; un-numbered back lines at 100, 300, and 500.	9 ± 0.5	3 ± 0.55	10	8	18

6.4. *Limits of error to be tolerated*.—The permissible errors in excess or in deficiency for verification or inspection shall not exceed 7 ml for 1000 ml measure and 5 ml for 500 ml measure.

7. Marking:

7.1. Each measure shall have permanently and legibly engraved or etched on its denomination in Arabic numerals the abbreviation "ml" being used to indicate milliliters. The manufacturer's name or trade shall be marked on the underside of the base of each measure.

SCHEDULE VI

(See rule 7)

Specification for weighing instruments and measuring instruction for use in transaction of trade and commerce an limits of errors to be tolerated in re-verification.

Part 1 GENERAL REQUIREMENTS

1.1 These specifications deal with all types of weighing instruments for commercial use and lay down broad essential constitutional requirements to ensure accuracy and long life. It also deals with marketing's graduation, methods and manner of verifying the tolerances errors and sensitiveness.

1.2 Weighing instruments of the following categories are included in these specifications:-

(a) Beam scales

(b) Platform Weighing Machine

(c) Steel Yards

(d) Counter Machines

(e) Spring Balances

(f) Dormant Platform machine and Weigh bridges

(g)Crane weighing machines

(h) Automatic weighing machines

2.1 weighing instruments shall be of shall be of the type commonly known as vibrating type. A vibrating type of instrument is an instrument is which has its indicators oscillating on either side of the position of equilibriums.

2.3 Weighing instruments shall be of good working and finish and shall be verified in clean condition.

2.4 Weighing instruments with assembly parts, the assembly of which will affect the accuracy of the instrument, shall be so constructed as to make their use impossible without such parts. They will be suitably identified with the weighing instruments of which they form essential components.

2.5. Where an instruments has an interchangeable part the interchange or reversal shall not affect the accuracy of the instruments .

2.6. Knife edges and bearings .—Knife edges and bearings used in weighing instruments shall be of such material as will have a hardness not less than 62 Re or equivalent. They shall be so fitted as to allow the beam or steelyard to move easily and to allow the knife edges to bear upon practically the' whole length of the bearings.

2.7. All graduation shall consist of sharply defined uniform lines.

3. Marketing

3.1. All Weighing machines shall. be prominently, legibly and indelibly. marked with manufacturer's name or the registered trade mark, capacity and Class (wherever applicable).

3.2 The marking shall be both in Urdu and English.

3.3 . The manufacturer's name or the registered trade mark specified in clause 3.1 shall be such as will not be mistaken for the stamp of the seal of the verifying authority.

3.4. The capacity of the weighing instruments shall he indicated in. the following mariner, namely : —.

"To weigh ... ... (To be written in Urdu) Kg"
"To weigh … … g"

4. Sealing

4.1 All weighing instruments shall he provided by the manufacturer with a plug or stud of soft metal to resolve the stamp or seal. Such plug or stud shall' be provided in 'a conspicuous Part of the instrument and shall be made in such a manner as to prevent is removal without obliterating the seal of the verifying authority.

5. Verification.

5.1 All weighing instrument shall be verified in the condition of their normal use wherever practicable. Non portable weighing instruments shall be verified in situ in addition to any other test may be taken at the manufacturer's or dealers premises.

5.2. Weighing instruments shall be verified for sensitiveness (wherever applicable) and for greatest error at full Load,

5.3. The terms "sensitiveness" and "error" -mean as follows: —

Sensitiveness is the least weight required to be added or removed from the loading platform or, as the case may be, pan to cause an appreciable movement of the indicator from its position of equilibrium. Error is the least weight required 10 bring the indicator to the position of poise or equilibrium from its position of imbalance.

PART II — BEAM SCALES

1. Definition

1.1 A beam scale is a weighing instrument with equal arms, having three knife edges three bearings an indicator in the centre and pans suspended from the end knife edges.

2. Classes of beam scales.

Beam scale shall have the following four classes:-

2.1 Class "A" shall include chemical and assay balances and other beam scales provided with means of leaving all the bearing and knife edges and satisfying requirements of Table-I

2.2. Class 'B' shall include beam scales generally used in bullion trade satisfying the requirements of Table II.

2.3. Class 'C' shall include beam scales satisfying the requirements of Table III.

2.4. Class 'D' shall cover beam scales satisfying the accuracy requirements of Table IV and distinguished from Class 'C' scales by the provision of two holes through the blade, one on higher side of the central knife edge.

3. Materials.

3.1 Beam scales shall be made of either mild steel, brass, bronze, aluminum alloy or stainless steel.

3.2 The pans shall be made of either mild steel, stainless steel, brass• or bronze hard wood or leather Wood and leather shall be permissible only in classes 'C' and 'D' beam scales.

3.3 Pans shall be suspended from the beam by metal chains or metal stirrup supports.

3.4 Beam scales of capacities less than 100 kg with wooden pans shall have metal sheets covering the pans.

4. Beam fittings.

4. The knife edges and bearings used in beam scales shall be ‘of one of the following types: —

4.4.1. “Agate-box” wherein agate bearings are fitted in brass or iron box, with side, holes, which permit of the projecting ends of the knife edges passing into the boxes and resting on or rising• to their bearings.

4.2. “Dutch end” wherein the end bearings are fixed inside plates bolted together across the beam to form a shackle.

4.3. “Swan-neck” wherein the ends are, carved and slotted, the bottom of the slot forming a knife-edge, the extremities’ of the beam being widened ‘in a direction at right angles to its length so that the base’ of the slot is parallel to the centre knife-edge.

4.4. “Continuous knife-edges” wherein the knife-edges bear along their whole length.

5. Construction.

5.1. Beam scales shall not have a loaded weight pan.

5.2. Class ’A’ scale shall be provided’ with a glass case. It shall also be provided with level indicator and leveling screws, to facilitate leveling of the beam scale.

5.3.1. A beam scale of classes ‘C’ and .‘D’ category may be provided with a balance ball or a balance box securely attached to one of the suspension chains or pans.

5.3.2 Beam’ scales with wooden pans shall be provided with balancing ball or box.

5.3.3 Any attachment for adjusting the balancing of beam scales shall be permanently fastened and where a balancing ball or box is used for occasional adjustments, it shall be so fixed that it cannot readily be tampered’ with.

5.3.4. Balance ball or box shall not be- so large as to contain more loose material than an amount exceeding One percent in weight of the opacity of beam scale under 50 kg. or an amount exceeding VI kg for beam scales of capacity over 50 kg.

6. Marking.

Beam scales shall be conspicuously legibly and indelibly marked so as to indicate their class, capacity and the manufacturer’s name or initials or trade mark. The capacity and class shall be indicated in Urdu as well as English script.

7. Verification.

7.1 Beam scales shall V be verified for sensitiveness and error at full load and shall comply with the requirements of Table I, II, III & IV

7.2. Beam scales shall also be verified with, the pans loaded to half the capacity. At this load, the beam scales shall V not have a difference exceeding 50 per cent of the permissible error at full, load when the knife edges, or bearings are. moved laterally within their limits of movements. Similarly, when the load on the pan in moved to any position, the difference in weight shown shall not exceed 50 per cent of the error permissible at full load.

TABLE I: SENSITIVENESS AND ERRORS FOR BEAM SCALES CLASS ‘A’

	Verification			Inspection		
Capacity	Sensitiveness per division of scale when fully loaded.		Greatest error to be tolerated either in excess or in deficiency when fully loaded	Sensitiveness per division of scale when fully loaded.		Error to be tolerated either in excess or in deficiency when fully loaded.
1	2		3	4		5
2 Kg	. .	. .	0.02 mg	0.1 mg	0.06 mg	0.2 mg
10 Kg	. .	. .	0.05 mg	0.5 mg	0.15 mg	1.0 mg
20 g	. .	. .	0.08 mg	0.84 mg	0.24 mg	1.6 mg
50 g	. .	. .	0.10 mg	1.0 mg	0.30 mg	2.0 mg
200 g	. .	. .	0.15 mg	1.2 mg	0.45 mg	2.4 mg
1 kg	. .	. .	5.0 mg	20.0 mg	15.0 mg	40.0 mg
5 kg	. .	. .	10.0 mg	40.0 mg	30.0 mg	80.0 mg
20 kg	. .	. .	20.0 mg	80.0 mg	60.0 mg	160.0 mg

TABLE II: SENSITIVENESS AND ERRORS FOR BEAM SCALES CLASS 'B'

	Verification			Inspection		
Capacity	Sensitiveness when fully loaded.		Greatest error to be tolerated either in excess or in deficiency when fully loaded	Sensitiveness when fully loaded.		Greatest errors to be tolerated either in excess or in deficiency when fully loaded.
1	2		3	4		5
20 g	. .	. .	2.0 mg	4.0 mg	6.0 mg	8.0 mg
50 g	. .	. .	5.0 mg	10.0 mg	15.0 mg	20.0 mg
100 g	. .	. .	8.0 mg	16.0 mg	24.0 mg	32.0 mg
200 g	. .	. .	15.0 mg	30.0 mg	45.0 mg	60.0 mg
500 g	. .	. .	30.0 mg	60.0 mg	90.0 mg	120.0 mg
1 kg	. .	. .	60.0 mg	12.0 mg	180.0 mg	240.0 mg
2 kg	. .	. .	100.0 mg	200.0 mg	300.0 mg	400.0 mg
5 kg	. .	. .	200.0 mg	400.0 mg	600.0 mg	800.0 mg
10 kg	. .	. .	400.0 mg	800.0 mg	1,200.0 mg	1,600.0 mg
20 kg	. .	. .	650.0 mg	1,300.0 mg	1,950.0 mg	2,600.0 mg
50 kg	. .	. .	1,200.0 mg	2,400.0 mg	3,600.0 mg	4,800.0 mg
100 kg	. .	. .	2.500.0 mg	5,000.0 mg	7,500.0 mg	10,000.0 mg

TABLE III: SENSITIVENESS AND ERRORS FOR BEAM SCALES CLASS 'C'

	Verification			Inspection		
Capacity	Sensitiveness when fully loaded.		Greatest error to be tolerated either in excess or in deficiency when fully loaded	Sensitiveness when fully loaded.		Greatest errors to be tolerated either in excess or in deficiency when fully loaded.
1	2		3	4		5

100 g	. .	. .	100.0 mg	200.0 mg	300.0 mg	400.0 mg
200 g	. .	. .	200.0 mg	400.0 mg	600.0 mg	800.0 mg
500 g	. .	. .	300.0 mg	600.0 mg	900.0 mg	1,200.0 mg
1 kg	. .	. .	400.0 mg	800.0 mg	1,200.0 mg	1,600.0 mg
2 kg	. .	. .	600.0 mg	1.2 g	1,800.0 mg	2.4 g
5 kg	. .	. .	1.8 g	3.6 g	5.4 g	7.2 g
10 kg	. .	. .	4.5 g	9.0 g	13.5 g	18.0 g
20 kg	. .	. .	7.0 g	14.0 g	21.0 g	28.0 g
50 kg	. .	. .	10.5 g	21.0 g	31.5 g	42.0 g
100 kg	. .	. .	20.0 g	40.0 g	60.0 g	80.0 g
200 kg	. .	. .	27.0 g	54.0 g	81.0 g	108.0 g
300 kg	. .	. .	32.0 g	64.0 g	96.0 g	128.0 g
500 kg	. .	. .	55.0 g	110.0 g	165.0 g	220.0 g
1,000 kg	. .	. .	105.0 g	210.0 g	315.0 g	420.0 g

TABLE IV: SENSITIVENESS AND ERRORS FOR BEAM SCALES CLASS 'D'

	Verification			Inspection	
Capacity	Sensitiveness when fully loaded.	Greatest error to be tolerated either in excess or in deficiency when fully loaded		Sensitiveness when fully loaded.	Greatest errors to be tolerated either in excess or in deficiency when fully loaded.
1	2	3		4	5
200 g	. .	. .	800.0 mg	800.0 mg	2,400.0 mg	1,600.0 mg
500 g	. .	. .	1,200.0 mg	1,200.0 mg	3,600.0 mg	2,400.0 mg
1 kg	. .	. .	2.0 g	3.0 g	6.0 g	6.0 g
2 kg	. .	. .	3.0 g	4.5 g	9.0 g	9.0 g
5 kg	. .	. .	6.0 g	9.0 g	18.0 g	18.0 g
10 kg	. .	. .	12.0 g	18.0 g	36.0 g	36.0 g
20 kg	. .	. .	25.0 g	40.0 g	75.0 g	80.0 g
50 kg	. .	. .	30.0 g	45.0 g	90.0 g	90.0 g
100 kg	. .	. .	50.0 g	75.0 g	150.0 g	150.0 g
200 kg	. .	. .	70.0 g	100.0 g	210.0 g	200.0 g
300 kg	. .	. .	90.0 g	150.0 g	217.0 g	300.0 g
500 kg	. .	. .	130.0 g	250.0 g	390.0 g	500.0 g
1,000 kg	. .	. .	250.0 g	500.0 g	750.0 g	1,000.0 g

PART III – PLATFORM MACHINES

1. Definition.

1. A platform weighing machine is a weighing instrument with com pound levers and with the goods receptacle generally in the form of a platform. The

capacity of these machines shall not exceed 3,000 kg. and weight of the load shall be indicated either with a steelyard or with any other form of indicator.

2. Capacities.

2. Platform weighing machines shall be of one of the capacities shown in Table V.

2.1. The steelyard in the platform weighing machine shall not have any readily removable parts except the support for counter piece proportional weights. There shall be a stop or stops to prevent the sliding poise or poises from travelling behind the zero mark.

The minimum travel of a steelyard in plate form machine shall, be 10 mm either way.

2.2. If a movable butch, barrow, frame or bucket is used instead of the ordinary platform it shall form an essential part of the machine without which the machine cannot be balanced. The movable butch, barrow frame or bucket shall be identified with the machine.

2.3. Where a balance box is provided on the steelyard, the balance ball should not be easily accessible.

2.4. The balancing arrangement for daily wear and tear shall have range between 0.25 per cent and 0.5 per cent of the capacity of the machine and not less than 0.125 per cent of the capacity each way. The balance box containing the balancing ball shall be securely attached to the steel. yard, preferably by passing a bolt through the easing to the steelyard. The balancing ball shall be actuated by a detachable key (see Table VI.)

2.5. In the case of the platform machines provided with dials—

2.5.1. Racks and pinions shall be of hard wearing material:

2.5.2. The extremity of the index shall in no position, be at a greater distance from the graduated surface of the dial than 5 mm and shall be made to meat but not to obscure the graduation marks: and

2.5.3. The dial shall be graduated into equal parts and the minimum width apart of the graduations shall not be less than 3 mm.

2.6. The permissible extension of the platform on either side of the box in the case of extended platform shall be not more than 25 per cent of the length of the box.

3. Counterpoise proportional weights.

3.1. All loose counterpoise proportional weights in a platform machine shall be identified with the machine by a number of any other suitable mark of identification, which shall be indelible. The counterpoise weights shall be marked with their equivalent weights in the following manner:

(to be written in Urdu) 100 kg.

3.2. The counterpoise weights shall be hexagonal in shape with the slot of a suitable size to allow them being placed on the counterbalance.

3.3. The counterpoise proportional weights shall be made of cast iron.

3.4. The proportional weights shall have one rectangular loading hole which should be undercut or tapered inside so as to bold lead securely for normal wear and tear. The surface of the lead in the loading hole, when new, shall be at Least 3 mm inside form the bottom surface of the weight.

3.5. In the case of platform machines provided with proportional counterpoise weights the smallest denomination of the counterpoise weight shall be equivalent to the maximum graduation on the minor steelyard.

3.6. The denomination of the proportional weights shall be in the' ratio of 1: 2: 2: 5 and the total equivalent weight of all the proportional weights provided shall not exceed the capacity of the weighing machine.

Note: While arriving at the capacity of the platform machines, the maximum graduation shown on the steelyard in the case of loose weight platform machines and on the minor steelyard in the case of no-loose weight type machines shall not be taken into account.

4. Verification.

4.1. The steelyard of the platform machine shall remain horizontal at no load. With one-quarter of the maximum load or as near thereto as is practicable the platform machine shall indicate the same weight' within half the prescribed limits of error, whether the load is placed in the centre or on any of the four corners of the platform.

4.2. Platform machines shall be verified to test the accuracy of any graduation up to the total capacity. All loose counterpoise weights, where such are provided, shall be verified and suitably sealed to prevent tempering.

4.3. When a platform machine is fitted with relieving gear, the prescribed limits of error shall not be exceeded when the machine is put steadily out of and into gear. The plate or platform, shall be entirely disengaged from its bearings when the machine is in relief.

4.4. Dial machines shall be verified for error only. No sensitiveness test shall be taken on such machines. The error at any load shall not exceed the limits prescribed in Table V.

4.5. Platform machines with the steelyard arrangement shall be verified for error as well as for sensitiveness at full load. The permissible errors and sensitiveness are indicated in Table V.

4.6. Platform machines shall- not be verified for sensitiveness at loads less than full load.

Sealing.

A stud or a plug of soft metal shall be provided on the steelyard for receiving the seal in the case of Steelyard Weighing Machines. In the case of dial machines such a plug shall be provided on the dial where it is accessible otherwise on the body of the machine.

TABLE V: SENSITIVENESS AND ERRORS FOR PLATFORM MACHINES

	Verification			Inspection		
Capacity	Sensitiveness when fully loaded.	Greatest error to be tolerated in excess or in deficiency when fully loaded		Sensitiveness when fully loaded	Greatest error to be tolerated in excess or in deficiency when fully loaded.	
		Vibrating machines	Platform machines fitted with dials		Vibrating machines	Platform machines fitted with dials
50 kg	15 g	30 g	One half the weight re-by the interval between consecutive graduation marks	45 g	60 g	Presented by the interval between graduation marks
100 kg	25 g	50 g		75 g	100 g	
150 kg	30 g	60 g		90 g	120 g	
200 kg	35 g	70 g		105 g	140 g	
250 kg	45 g	90 g		135 g	180 g	
300 kg	50 g	100 g		150 g	200 g	
500 kg	90 g	180 g		270 g	360 g	
1,000 kg	150 g	300 g		450 g	600 g	
1,500 kg	200 g	400 g		600 g	800 g	

2,000 kg	250 g	500 g	750 g	1,000 g

Note: The capacities 150 kg and 250 kg are not preferred and shall not be used as far a possible.

TABLE VI: RANGE OF BALANCING ARRANGEMENT FOR PLATFORM MACHINES

Capacity	Range of Balancing Arrangement		
	Maximum 05 per cent of capacity	Minimum 0.25 per cent of capacity	0.125 per cent each way
50 kg	250 g	120 g	60 g
100 kg	500 g	250 g	120 g
150 kg	750 g	370 g	180 g
200 kg	1,000 g	500 g	250 g
250 kg	1.3 kg	620 g	310 g
300 kg	1.5 kg	750 g	370 g
500 kg	2.5 kg	1.25 kg	620 g
1,000 kg	5.0 kg	2.50 kg	1.25 kg
1,500 kg	7.5 kg	3.75 kg	1.87 kg
2,000 kg	10.0 kg	5.00 kg	2.50 kg

PART IV: STEELYARDS

1. Definition.

1. A steelyard in an unequal arms balance

2. Capacities.

Steelyards shall be of one of the capacities mentioned in Table VII.

3. Design and construction.

Steelyards shall be made of either mild steel of stainless steel. The shank shall be perfectly straight. Notches or graduations on the shank shall be cut in one plane and at right angles to the shank. All steelyards shall be provided with a stop or other suitable arrangement to prevent excessive oscillation of the shank. The sliding poise and suspending hooks shall be securely attached to the instrument. All end-fittings such as the not attached to prevent the poise career riding off the steelyard shall be securely fixed to the shank. The slide poise shall be freely movable and there shall be a stop to prevent it from travelling behind the zero mark. Steelyards having a counterpoise or travelling poise shall be provided with a hole or suitable for the further adjustment of the counterpoise or travelling poise, such hole being undercut. Whatever loose material is ‘used in the travelling poise, it shall be securely enclosed. Steelyards shall be neither reversible, nor have three hooks, shall not be of counter type. Steelyard shall have a zero graduation.

4. Verification.

4.1. Steelyards shall be verified at full load for sensitiveness and error and shall comply with the requirements of Table VII.

4.2. The verification for sensitiveness is carried out by loading the Instrument with the maximum testing load with the steelyard in horizontal position and ascertaining that it turns with the addition of the amount shown in be table for sensitiveness.

4.3. Each numbered graduation shall be verified and the instrument shall be correct whether it is carried out with increasing or decreasing loads.

4.4. The intermediate graduations shall also be tested to see that they are correct and are at proper distance apart.

4.5. Steelyard shall be verified for error by ascertaining the weight in excess or deficiency (if any) required to bring the steelyard to a horizontal position when fully loaded.

4.6. No verification for sensitiveness at a lower load shall be made.

5. Sealing.

Each instrument shall be provided with a plug or stud of soft metal on the front face of the shoulder of the steelyard for receiving the seal, such a plug or stud should be made irremovable by under cutting it or in some other suitable manner.

TABLE VII: SENSITIVENESS AND ERRORS FOR STEELYARDS

	Verification		Inspection	
Capacity	Sensitiveness when fully loaded	Greatest error to be tolerated either in excess or in deficiency when fully loaded	Sensitiveness when fully loaded	Greatest error to be tolerated either in excess or in deficiency when fully loaded
1	2	3	4	5
10 kg	5 g	7.5 g	15 g	15.0 g
20 kg	10 g	15.0 g	30 g	30.0 g
50 kg	25 g	50.0 g	75 g	100.0 g
100 kg	40 g	80.0 g	120 g	160.0 g
150 kg	60 g	120.0 g	180 g	240.0 g
200 kg	65 g	130.0 g	195 g	260.0 g
250 kg	80 g	160.0 g	240 g	320.0 g
300 kg	90 g	180.0 g	270 g	760.0 g

PART V – COUNTER MACHINES

1. ***Definition.*** – Counter Machine is an equal arm weighing instrument of a capacity not exceeding 50 Kg, the pans of which are above the beam.

2. ***Capacities***. – Counter machines shall be one of the capacities mentioned in table VIII.

3. ***Design and Construction***.

3.1 When the beam or body has two sides they shall be connected together by not less than two cross bars. The supports for the pans shall be of suitable rigid structure such as cross strengthened by straps. Central pieces or forks shall be fixed so that they cannot twist or get out of place

3.2 Bearing surfaces and point of contact of all stays, hook and loops shall be of hard steel or agate. The knife edges and bearings shall be so fitted as to allow the beam to move freely and the knife edges shall practically bear upon the whole length of the working parts.

3.3 A counter machine may have balance box for minor adjustments. In such cases, the balance box shall be permanently fixed beneath the weight pan and shall be large enough to contain loose material to an amount not exceeding 1 percent of the capacity be verified for error by ascertaining the weight in excess or deficiency (if

any) required to bring the beam of the instrument to a horizontal position when fully loaded.

3.4 The pans shall be made of mild steel, stainless steel, brass or bronze.

3.5 The minimum fall either way on counter machines shall be under –

Capacity	Fall
Not exceed in 2 Kg -- -- -- -- -- -- -- -- --	6 mm
Above 2 Kg and not exceeding 15 Kg -- -- -- -- --	10 mm
Above 15 Kg and not exceeding 25 Kg -- -- -- -- --	12 mm
50 Kg -- -- -- -- -- -- -- -- -- --	13 mm

4. Verification

4.1 All counter machines shall be verified for sensitiveness and error at full load and shall comply with the requirements of table VIII.

4.2 Counter machines shall be verified on a level plane.

4.3 Where an instrument has an interchangeable or reversible part, the interchange or reversal shall not affect the accuracy of the instrument.

4.4 The counter machine shall be verified for sensitiveness at full load with the beam in horizontal position and for ascertaining that the addition of the amount specified in the table shall cause the pointer to rise or fall to the limit of its range of movement.

4.5 No verification for sensitiveness at a lower load shall be made.

4.6 The counter machines shall be provided with a plug or stud of a soft metal in a conspicuous part of the beam or body for receiving a seal. Such a plug or stud shall be made irremovable by undercutting it or in some other suitable manner.

4.7 With the pans loaded to half the capacity no appreciable difference in the accuracy of the counter machine shall result from moving the knife edges or bearing laterally or backward or forward within their limits of movements.

4.8 When the goods pan is not in form of a scoop, the counter measures shall indicate the same weight within half the prescribed limits of error, if the centre of a load equal to half the capacity is placed on the goods pan anywhere within a distance from the centre equal to one third of the greatest length of the pan, or if the pan has a vertical side, against the middle of the side, the weight being entirely on the weight pan, but in any position on it.

4.9 When the goods pan is in the form of a scoop, the counter machine shall be correct if half of the full load is placed against the middle of the back of the and the other half in any position on the scoop.

5. Sealing

Each instrument shall be provided with a plug or stud of a soft metal in a conspicuous part of the machine. No other adjusting contrivance shall be used.

TABLE VIII: SENSITIVENESS AND ERRORS FOR COUNTER MACHINES

	Verification		Inspection	
Capacity of Machine	Sensitiveness when fully loaded	Greatest error to be tolerated either in excess or in deficiency when fully loaded	Sensitiveness when fully loaded	Greatest error to be tolerated either in excess or in deficiency when fully loaded
1	2	3	4	5
500 g	1.3 g	1.95 g	3.9 g	3.9 g
1 kg	1.8 g	2.65 g	5.4 g	5.3 g
2 kg	2.6 g	3.5 g	7.8 g	7.0 g
5 kg	4.5 g	6.25 g	13.5 g	12.5 g
10 kg	6.0 g	9.0 g	18.0 g	18.0 g
15 kg	7.0 g	10.0 g	21.0 g	20.0 g
20 kg	8.5 g	15.0 g	25.5 g	26.0 g
25 kg	10.0 g	15.0 g	30.0 g	30.0 g
50 kg	14.0 g	28.0 g	42.0 g	56.0 g

PART VI – SPRING BALANCES

1. Definition.

Spring balance is an instrument which determines the weight of an object by the extension or compression of a spring, such extension or compression being registered by means of a pointer on a dial or on a graduated scale.

2. Capacities.

Spring balances shall be of one of the capacities mentioned in Table IX.

3. Design and Construction.

3.1. Spring balances with the pan below spring shall be suspended permanently from a stand, support or bracket.

3.2. The extremity of the index finger shall not exceed 1 mm in width and shall not be more than 3 mm from the scale or dial.

3.3. The scale shall be graduated into equal parts, and the width apart of the graduations shall not be less than 3 mm for a capacity of 15 kg and under, and not less than 3 mm for a capacity of 20 kg and above.

3.4. The weight corresponding the interval between consecutive graduation marks shall not exceed the values given in Table IX.

3.5. When the graduation commences at a fixed load, the position of the range of adjustment shall not exceed 1 per cent, of the capacity of the instrument except in the case of instrument used for mixing purposes where it shall not exceed 2 per cent.

3.6. The body shall be constructed either of brass, or cast iron, or any other suitable material, and shall be sufficiently robust in construction. If pans are provided for the balance, they shall be made of brass, bronze, cast iron, mild- steel or stainless steel. Metal chains or metal stirrup supports shall be provided if pans are suspended. Rack and pinions, if provided, shall be made of hard wearing materials.

4. Verification.

4.1. When the pan is below the spring the prescribed limits of error shall not be exceeded wherever the load is placed on it.

4.2. Where the pan is above the spring—

4.2.1. When the goods pan is not in the form of a scoop, the instrument shall indicate the same weight within half the prescribed limits of error, if the centre of a load equal to half the capacity is placed on the

pan anywhere within the distance from the centre equal to the one third of the greatest length of the pan or if that pan has a vertical side against the middle of that side.

4.2.2. When the pan is in the form of a scoop, the spring balance shall be correct, if half the full load is placed against the middle of the back of the scoop and the other half in any position on the scoop.

4.3. Each numbered graduation shall be verified and the intermediate graduation may also be verified.

4.4. The instrument shall be correct whether the verification is made by increasing or decreasing loads provided that in either case the spring shall be allowed to vibrate before the reading is taken.

4.5. The instrument shall be verified for ability to recover by allowing the load equal to its maximum capacity remaining on the same for a period of 24 hours and then after the expiry of 4 hours tested for accuracy, the load being removed in the meantime.

4.6. Spring balances shall not be verified for sensitiveness.

5. Sealing

Spring balances shall be fitted with a soft metal plug to receive a seal and, wherever practicable, this plug shall pass through the dial or frame. The plug or stud shall be so supported as to allow no risk of injury to the instrument.

TABLE IX: LIMITS OR ERRORS FOR SPRING BALANCE TO BE TOLERATED

Capacity	Weight corresponding to interval between consecutive graduations shall not exceed	Maximum permissible Error		Remarks
		Verification	Inspection	
500 g 1 g 2 g 3 kg 5 kg 10 kg 15 kg 20 kg	5.0 g 5.0 g 20 g 20 g 20 g 50 g 50 g 100 g	A weight corresponding to a quarter of the interval between successive graduation.	A weight, corresponding to half the interval between successive graduation.	While fixing the diameter of one effective circle on dial of one revolution a blank space of 20 mm at the end of graduation has to be provided. The minimum width apart to graduation shall not be

30 kg	100 g	less than 2 mm for capacities from 500 to 15 kg and 3 mm for the rest of the size, in the case multi-revolution spring balances, the minimum blank space will not apply.
50 kg	250 g	
100 kg	500 g	
150 kg	1.0 g	
200 kg	1.0 g	
300 kg	1.0 g	
500 kg	2.0 g	

PART VII. — WEIGH-BRIDGES

1. Definition

Weigh-bridge means a Weighing instrument constructed with compound levers with the indicator system carried on foundation, separate from the lever systems to weigh loads of a capacity of 3,000 kg and over, through the medium of propositional weights or indicating mechanism.

Note.— Weigh-bridges of 2,000 kg and below, commonly known as Dormant Platform Machines, are also included in this Part.

2. Capacities.

Weigh-bridges shall be of one of the capacities mentioned in Table X.

3. Design and construction,

3.1. The steelyard of a weigh-bridge shall not involve any readily removable parts except the support for the counterpoise. There shall be one or more steps to prevent the sliding poise or poises from the travelling be- bind the zero mark.

3.2. The minimum travel of the steelyard in weigh-bridges, shall be 13 mm both ways.

3.3. If a movable hutch, barrow, frame of bucket is used instead of the ordinary platform, it shall form an essential part of the machine without which it cannot be balanced.

3.4. All loose counterpoise shall be identified with the machine by a number, or other sufficient mark of identification which shall be indelible. They shall be marked with their equivalent weights in the following manner.

(To be written in Urdu and English—100 kg.)

3.5. Proportional weights shall be of the hexagonal shape with a slot of a suitable size to allow them being placed on the counter balance.

3.6. The proportional weights shall be made of cast iron. The proportional weights shall have one rectangular loading hole which should be undercut or tapered so as to hold lead securely for adjustment. Surface of the lead in loading hole, then new, shall be at least 3 mm inside from the bottom surface of the weight.

3.7. The smallest denomination of the proportional weight shall be equivalent to the maximum graduation on the minor steelyard;

3.8. The denomination of the proportional weight shall be in the ratio of 1:2:2:5 and the total equivalent weight of all the proportional weight shall not exceed the total capacity of the weigh-bridge.

Note.— While arriving at the capacity of the weight-bridge, the maximum graduation shown on the steelyard in the case of loose weight weigh-bridges and on the minor steelyard in the case of no loss weight type weigh-bridge shall not be taken into account.

3.9. The balancing arrangement for daily wear and tear shall have a range between 0.25 per cent and 0.5 per cent of the capacity of the machine not less than 0.125 per cent of the capacity each way (see Table XI). The balance box containing the balancing bail shall b securely attached to the steelyard, preferably by passing a bolt through the casing of the steelyard. The balancing ball shall be actuated by a detachable key.

3.10. The following provision shall apply to weigh-bridges with deals.

3.10.1. Rack and opinions shall be of hard metal.

3.10.2. The extremity of the index shall in no position be a greater distance from the graduated surface of the dial than 5 mm and shall be made to meet but not to obscure the graduation mark (except where duel graduation are made),

3.10.3. The dial shall be graduated into reasonably equal parts and minimum width apart from, the graduation shall not be less than 3 mm.

3.11.1. The framework shall be built up of mild steel rolled sections or cast iron or steel casting. It shall be rigid structure, strengthened suite ably so that it will be capable of resisting any vibration and shall not throw the lever system out of alignment due to any subsidence of the foundation.

3.11.2. Brackets shall be cast on the side frames to support the frame work.

3.12.1. Where relieving gear is fitted, the relieving apparatus shall disengage the under-lever and save the knife edges from shock or wear.

3.12.2. The plate or platform of the machine shall be entirely disengaged from its bearings when the machine is in relief.

3.13. All knife edges and steel bearings shall be special high quality steel accurately lapped to gauge after hardening and shall be interchangeable (steel knife, and bearings, which are welded into iron may also be permitted) knife edges and steel bearing shall be readily replicable without dismantling so that the weigh-bridges can be maintained in perfect working order. The knife edges and bearing shall be accordingly and firmly be cured in machine beds preferably be two shanks and alternatively be bolts, nuts or screws. All knife edges and bearing shall be protected against dirt and corrosion.

3.14. The platform shall be steel chequered plate and shall he rigid. Accessibility to the pit shall be ensured.

4. Verification,

4.1. All weigh-bridges shall be verified for sensitiveness and error at full load and shall comply with the requirements of Table X. When fully loaded, the load being equally distributed on the platform, it shall indicate the weight correctly within greater error in excess or deficiency (if any) than permitted work.

4.2. Spring crane machines shall not be verified for sensitiveness. The total capacity of the machine, or to such smaller capacities as the minimum graduation on the steelyard may indicate shall be carried out.

4 3. Loose counterpoises where they are provided, shall be verified.

4.4 The machines shall be verified by adding loads equal to the major division or notches, and then ascertaining that additional load equal to the value of one notch or division is correctly indicated.

4.5 The verification of dial machines shall be carried out in a similar manner with the exception of sensitiveness verification.

4.6. The verification for sensitiveness and error, other than in dial machines, is to be made at maximum load or as near thereto as possible.

4.7. With one quarter of the maximum load or as near thereto as is practicable the weigh-bridge shall indicate the same weight within half the prescribed limits of error whether the load is placed in the middle or at any of the corners of the platform.

4.8 When provided with a relieving gear, the prescribed limits of error shall not be exceeded when the machine is steadily put out of or into gear.

5. Marketing

All parts of each weigh-bridge shall be indelibly numbered or marked so as to facilitate erection at site.

6. Sealing

6.1 Dial machines shall be fitted with soft metal plug to receive a seal and, wherever practicable this plug shall be passes through the dial and frame. The plug or stud fitted on the dial shall be so supported as to allow no risk of injury to the instrument,

6.2. On weigh-bridges, other than dial machines, a plug or stud shall be provided in a conspicuous part on the indication lever or steelyard.

TABLE X: SENSITIVENESS AND ERROR FOR WEIGHT-BRIDGES

Capacities of Machines	Sensitiveness when fully loaded	Verification		Sensitiveness when fully load	Inspection	
		Greatest error to be tolerated in excess			Greatest error to be tolerated in excess or in deficiency when fully loaded	
		Vibrating Machines	Machines fitted with dials		Vibrating Machines	Machines with dials
1,000 kg	700 g	700 g	One half of the weight represent interval between consecutive graduation marks	2.1 kg	1.4 kg	The weight represented by the interval between consecutive graduation marks
2,000 kg	900 g	900 g		2.7 kg	1.8 kg	
3,000 kg	1.25 kg	1.25 kg		3.7 kg	2.5 kg	
5,000 kg	1.55 kg	1.8 kg		4.5 kg	3.6 kg	
10,000 kg	2.3 kg	2.7 kg		6.9 kg	5.4 kg	
15,000 kg	2.5 kg	3.0 kg		7.5 kg	9.0 kg	
20,000 kg	3.0 kg	4.5 kg		9.0 kg	9.0 kg	
25,000 kg	3.5 kg	5.4 kg		10.5 kg	10.8 kg	
30,000 kg	3.8 kg	6.1 kg		11.4 kg	12.2 kg	
40,000 kg	4.2 kg	7.3 kg		12.6 kg	14.6 kg	
60,000 kg	5.0 kg	9.0 kg		15.0 kg	18.0 kg	
80,000 kg	5.5 kg	10.5 kg		16.5 kg	21.0 kg	
1,00,000 kg	6.4 kg	12.7 kg		19.2 kg	25.4 kg	
2,00,000 kg	8.2 kg	19.0 kg		24.6 kg	38.0 kg	

TABLE XI: RANGE OF BALANCING ARRANGEMENT FOR WEIGH-BRIDGES

Capacity	Range of balancing Arrangement		
	Maximum 0.25 per cent of capacity	Maximum 0.25 per cent of capacity	0.125 per cent each way
1,000 kg	5 kg	2.5 kg	1.3 kg
2,000 kg	10 kg	5.0 kg	2.5 kg
3,000 kg	15 kg	7.5 kg	3.5 kg
5,000 kg	25 kg	12.5 kg	6.2 kg
10,000 kg	50 kg	25.0 kg	12.5 kg
15,000 kg	75 kg	37.5 kg	18.7 kg
20,000 kg	100 kg	50.0 kg	25.0 kg
25,000 kg	125 kg	62.5 kg	31.7 kg
30,000 kg	150 kg	75.0 kg	37.5 kg
40,000 kg	200 kg	100.0 kg	50.0 kg

60,000 kg	. .	. .	. .	300 kg	150.0 kg	75.0 kg
80,000 kg	. .	. .	. .	400 kg	200.0 kg	100.0 kg
1,00,000 kg	. .	. .	. .	500 kg	250.0 kg	125.0 kg
2,00,000 kg	. .	. .	. .	1,000 kg	500.0 kg	250.0 kg

PART VIII—CRANE MACHINE

1. Definition.

Crane machine means a weighing instrument specially constructed to be suspended from the hook of a crane and is fitted with a hook for lifting the load and may be constructed upon the lever or spring principle.

2. Capacities.

Crane machines shall be of one of the capacities mentioned in Table XII.

3. Design and Construction,

3.1. A crane machine shall be sufficiently strong to withstand wear and tear in the exacting conditions under which it works.

3.2. No crane machine shall become a permanent link in the lifting gear. All working Parts shall be suitably protected from the dust and damp of the atmosphere. In a lever machine, the steelyard shall be made of corrosion resisting steel to resist the atmospheric influence and shall ho sufficient by rigid and accurate.

3.3. In a dial machine, the rack and pinions shall be of suitable herd wearing materials.

3.4. The range of balancing or adjusting arrangement shall not exceed 2 per cent of the capacity of the machine.

3.5. There shall be free movement of steelyard and on a dial machine the dial indicator shall work freely and return to its initial starting point after the load is removed.

4. Verification.

4.1. Crane machines of the lever type shall he verified for sensitiveness and error at full load and shall comply with the requirements of Table XII.

4.2. Spring crane machines shall not be verified for sensitiveness.

4.3. For spring machines, the limits of error shall he double than those of lever machine and are given in Table XIII.

4.4. Each numbered graduation shall be tested as far as practicable.

5. Sealing.

Crane machines shall be fitted with a plug or stud in a conspicuous Part either on the steelyard or on the dial of the machine to receive the.

TABLE XII: SENSITIVENESS AND ERRORS FOR CRANE WEIGHING MACHINES LEVER TYPE

Capacity	Verification		Inspection	
	Sensitiveness when fully load	Greatest error to be tolerated in excess or in deficiency when fully loaded	Sensitiveness when fully loaded	Greatest error to be tolerated in excess or in deficiency when fully loaded
1	2	3	4	5
500 kg	80 g	160 g	240 g	320 g
1,000 kg	700 g	700 g	2.1 kg	1.4 kg
2,000 kg	1.0 kg	1.0 kg	3.0 kg	2.0 kg
3,000 kg	1.0 kg	1.2 kg	3.6 kg	2.4 kg
5,000 kg	1.5 kg	1.5 kg	4.5 kg	3.0 kg
10,000 kg	2.5 kg	3.0 kg	7.5 kg	6.0 kg
15,000 kg	3.0 kg	3.5 kg	9.5 kg	7.0 kg
20,000 kg	3.5 kg	4.5 kg	10.5 kg	9.0 kg
30,000 kg	4.0 kg	6.0 kg	12.0 kg	12.0 kg
50,000 kg	5.5 kg	8.0 kg	13.5 kg	16.0 kg
1,00,000 kg	6.5 kg	13.0 kg	19.5 kg	26.0 kg
2,00,000 kg	8.0 kg	18.0 kg	24.0 kg	36.0 kg

TABLE XIII: SENSITIVENESS AND ERRORS FOR CRANE MACHINES DIAL TYPE (Spring and Flexure)

Capacity	Weight corresponding to interval between successive graduations shall not exceed	Permissible maximum error		
		Verification	Inspection	Remarks
500 kg	5 kg	A weight corresponding to half the interval between successive graduations.	A weigh corresponding to the interval between successive graduations.	The maximum width apart of graduations shall not be less than 3 mm.
1,000 kg	5 kg			
2,000 kg	5 kg			
3,000 kg	10 kg			
5,000 kg	25 kg			
10,000 kg	50 kg			
15,000 kg	100 kg			
20,000 kg	100 kg			
50,000 kg	250 kg			
1,00,000 kg	500 kg			
2,00,000 kg	500 kg			

PART IX. — AUTOMATIC WEIGHING MACHINES

1. Definition

An automatic weighing machine means any weighing scale which has an integral mechanism for automatically admitting and discharging a load, and may be fitted with an apparatus for counting or otherwise recording the number of load, handled.

2. Capacities

Automatic machines shall be of the capacities as agreed upon between the purchaser and the seller.

3. Design and construction,

3.1. Automatic weighing machines and their integral part shall be identified with the machines by an indelible number or other mark of identification.

3.2. The adjusting mechanism shall be suitably secured or constructed so that it cannot be tampered with.

3.3. The capacity of the automatic weighing machine shah be marked legibly on conspicuous part of the machine.

4. Verification

4.1. Automatic machines shall ire verified for error according to the requirements of Table XIV.

4.2. The accuracy of the output of the machine shall be verified by re-weighing to another weighing instrument not less than 20 continuous loads or, where practicable, the machine may be tested directly by the application of standard weights.

4.3. In verifying totalizing machines, not less than 50 loads shall be passed over the machine, namely, 10 minimum loads, 10 maximum loads and 30 loads of the mean between the minimum and the maximum.

5. Sealing.

Automatic machine shall be fitted with a plug on the beam shank or dial of the machine to receive the seal.

TABLE XIV. — LIMITS OF ERRORS FOR AUTOMATIC MACHINES TO BE TOLERATED

Use	Capacity	Error (Verification or Inspection)	
Weighing small loads of tea, coffee etc.	20 g and upwards.	0.5 per cent of the load in excess only.	The allowance in these case are subject to the provision that the error tolerated shall not exceed the weight represented by half a minimum divisions, marked on the dial or steel-yard.
Weighing grain, etc	5 kg and upwards	0.25 per cent of the load in excess or in deficiency.	
Weighing, Coal, etc	50 kg and upwards	0.5 per cent of the load in excess or in deficiency.	
"Totalizing" machines used for weighing coal, etc.	500 kg and upwards.	0.5 percent of the load of 50 weighing in excess or in deficiency.	

SCHEDULE VII
[See rule 11 (1)]
Licensing form
(Form "A")

OFFICE OF THE CONTROLLER OF WEIGHTS AND MEASURES
……..

License to manufacture / repair weights, measures, weighing instruments or measuring instruments.

License No…….…… year…….. (1) The controller of weights and Measures ……. Hereby grants to ……. (Name and address of the manufacturers/repairer)
……
……..
……
……..

a) License to manufacture / repair the following:—

(Include details of the type of weights, measures, weighing instruments or measuring instruments that are licensed to be manufactured or repaired by the party).

……
……
……
……
……
……

(2) The license is valid for the manufacturer / repairer named above in respect of his premises located at …… …….

(3) This license is valid from ……. To ……

(4) The manufacturer / repairer shall comply with the conditions noted below. If he fails to comply with any one of these conditions, his license is liable to be cancelled.

Signature
Controller of Weights and Measures
……
……..

Date ……
Place …….. (Seal)

Note. — In the case of firm, its name with the names of all its members should be given in paragraph 1.

CONDITIONS OF LICENSE

1. The person in whose favor this license is issued shall:-

   (a) Comply with all the relevant provisions of the Act and the rules for the time being in force;

   (b) Not encourage or countenance any infringement of the provisions of the Act, or the Rules for the time being in force and shall report without delay to the Inspector any infringement that may come to his notice.

   (c) Keep this license exhibited in some conspicuous part of the premises to which it relates;

   (d) Comply with any general or special directions that may be given by the Controller of Weights and Measures of ……

   (e) Surrender the license if and when required to do so by the Controller or any other officer/authorized in this behalf.

2. Every condition prescribed after the issue of this license shall, if notified in the official Gazette, be binding on the person / persons to whom the license has been granted.

(FORM 'B')

OFFICE OF THE CONTROLLER OF WEIGHTS AND MEASURES

License to a dealer in weights, measures, weighing instruments or measuring instrument.

License No…… Year …… (1) The Controller of Weights and Measures……. ……hereby grants to…… (Name and address of dealer or dealers)……..

a) license to deal in the following:

(Indicate details of the types of ……
Weights, measures, weighing…….
Instruments or measuring instruments that are licensed……
To be deal with by the dealer ……..

3. Any other condition that may be prescribe after the issue of this license and notified in the official Gazette shall be binding on the person in whose favour the license has been issued.

SCHEDULE VIII

[See rule 11(2)]

Licensing and renewal fees for manufacturers, repairers and dealers.

		Rs.	
For manufacturers	…	200.00	Per year.
For repairers	…	100.00	Per year.
For dealers	…	150.00	Per year.

SCHEDULE IX

[See rule 11(6)]

Register of licensed manufacturers, repairers and dealers.

OFFICE OF THE CONTROLLER OF WEIGHTS AND MEASURES

License No.	Date of Issue	Name of licensee, manufacturer, repairer or dealer with father's name and residential address	Place where workshop store room, shop, or office is situated.	Articles for the manufacture / repair / sale of which license was issued.	Trade mark or monogram used.	Orders regarding cancellation of license, if any	Result of appeal against cancellation of license.
1	2	3	4	5	6	7	8

Treasury Challan No.	Date of Deposit	Amount deposited	Renewed upto	Remarks
9	10	11	12	13

Note:
1. In case of a firm, the name of the firm with the names of all its partners to be given in column 3.
2. Column 6 does not apply to repairs and dealers.

SCHEDULE – X

[See rule (14)]

CHARGES TO BE LEVIED FOR VERIFYING AND STAMPING
WEIGHTS AND MEASURES OF THE PUBLIC

1. CARAT WEIGHTS

Denomination		Fee Per Piece
0.5/100c to 50/100c	. . . . .	Rs. 0 .50
Above 50/100c to 500c	. . . . .	Rs. 1.00

BULLION WEIGHTS

1 mg to 500 mg	. . . . .	Rs. 0.50
Above 500 mg upto 500 g.	. . . . .	Rs. 1.00
Above g 500 upto 2 kg.	. . . . .	Rs. 2.00

BRASS WEIGHTS

1 g to 500 g	. . . . .	Rs. 0.50
Above 500 g upto 2 kg.	. . . . .	Rs. 1.00

SHEET METAL WEIGHTS

1 Mg. to 500 Mg.	. . . . .	Rs. 0.50

IRON AND STEEL WEIGHTS

100 g to 500 mg.	. . . . .	Rs. 0.50
Above 500 g upto 2 Kg	. . . . .	Rs. 1.00
Above 2 Kg	. . . . .	Rs. 2.00

2. LIQUID CAPACITY MEASURES

1 ml to 500 ml	. . . . .	Rs. 0.50
Above 500 ml upto 5 1	. . . . .	Rs. 1.00
Above 5 1 upto 100 1	. . . . .	Rs. 2.00
Above 100 1	. . . . .	Rs. 2.00 for the first 100 liters plus Rs. 2.00 for every additional 100 liters or part thereof.

3. LENGTH MEASURES

Each measures below 1 meter	. . . . .	Rs. 0.50
Each measure of 1 meter and not exceeding 5 meter	. . . . .	Rs. 2.00
Above 5 meter and not exceeding 10 meter	. . . . .	Rs. 3.00
Above 10 meter	. . . . .	Rs. 5.00

4. LIQUOR MEASURES

Each measure upto 50 ml.	. . . . .	Rs. 1.00
Above 50 ml	. . . . .	Rs. 2.00

5. WEIGHING INSTRUMENT OTHER THAN BEAM SCALES OF CLASS 'C'

CAPACITY		
Each Scale not exceeding 500 g	. . . . .	Rs. 2.00
Above 500 g but not exceeding 5 kg	. . . . .	Rs. 3.00
Above 5 kg but not exceeding 20 kg	. . . . .	Rs. 5.00
Above 20 kg but not exceeding 50 kg	. . . . .	Rs. 10.00
Above 50 kg but not exceeding 200 kg	. . . . .	Rs. 12.00
Above 200 kg but not exceeding 500 kg	. . . . .	Rs. 20.00
Above 500 kg but not exceeding 1 ton	. . . . .	Rs. 75.00
Above 1 metric ton but not exceeding 5 metric ton	. . . . .	Rs. 30.00
Above 5 metric ton but not exceeding 20 M/T	. . . . .	Rs. 50.00
Above 20 M/T but not exceeding 50 M/T	. . . . .	Rs. 60.00
Above 50 M/T	. . . . .	Rs. 60.00 for the first 50 M/T plus Rs. 10.00 for each additional 20 M/T or part thereof.

5. BEAM SCALES OF 'C' CLASSES

Denomination		Fees Per Piece
Not exceeding 500 g	. . . . .	Rs. 1.50
Above 50 g but not exceeding 5 kg	. . . . .	Rs. 2.00
Above 5 kg but not exceeding 20 kg	. . . . .	Rs. 3.00
Above 20 kg but not exceeding 50 kg	. . . . .	Rs. 5.00
Above 50 kg but not exceeding 200 kg	. . . . .	Rs. 8.00
Above 200 kg but not exceeding 500 kg	. . . . .	Rs. 10.00
Above 500 kg but not exceeding 1 metric ton	. . . . .	Rs. 12.00
Above 1 metric ton	. . . . .	Rs. 16.00

6. MEASURING INSTRUMENTS (PETROL OR FUEL PUMPS FUEL VEHICLES METERS OF FILLERS)

CAPACITY		CHARGE
Not exceeding 50 Liters	. . . . .	Rs. 50.00
Exceeding 50 Liters	. . . . .	Rs. 75.00

7. OTHER THAN PETROL OR FUEL PUMPS

Fuel Lorries and Tanks	. . . . .	Rs. 200.00
Motors	. . . . .	Rs. 150.00

SCHEDULE – XI

[See rule 16 (4)]

ABBREVIATIONS OF DENOMINATIONS AND CAPACITY

1. Decimal Multiples and Sub-multiples:

Prefix		Value in terms of unit	Abbreviation
Kilo	. . . . .	1000	k
Centi	. . . . .	0.01 (10^{-8})	c
Milli	. . . . .	0.001 (10^{-4})	m
Micro	. . . . .	0.000,001 (10^{-6})	M

2. Weights:

Denomination		Value	Abbreviation
Tonne	. . . . .	1000 kg	
Quintal	. . . . .	100 kg	q
Kilogram	. . . . .	1000 g	kg
Gram	. . . . .	1 g	g
Milligram	. . . . .	0.001 g or (10^{-2})	g mg
Carat	. . . . .	200 mg	c

3. Capacity

Denomination		Value	Abbreviation
Kiloliter	. . . . .	1000 l	kl
Liter	. . . . .	1 l	1
Milliliter	. . . . .	0.001 ml or (10^{-8})	1 ml

4. Volume

Denomination		Value	Abbreviation
Cubic meter	. . . . .	m 3	m 3 or cm
Cubic centimeter	. . . . .	cm 3	cm3 or cu cm
Cubic millimeter	. . . . .	mm 3	mm3 or cu mm

5. Length

Denomination		Value	Abbreviation
Kilometer	. . . . .	1000 m	km
Meter	. . . . .	1 m	m
Centimeter	. . . . .	0.01 m or (10^{-2}) m	cm
Millimeter	. . . . .	0.001 m or (10^{-2}) m	mm
Micron	. . . . .	0.001 mm or (10^{-6}) m Or (10^{-3}) mm	Mm

6. Area

Denomination		Value	Abbreviation
Square kilometer	. . . . .	km^2	km^2 or sq km
Square meter	. . . . .	m^2	m^2 or sq m
Square centimeter	. . . . .	cm^2	cm^2 or sq cm
Square millimeter	. . . . .	mm^2	mm^2 or sq mm

* Both these abbreviations are current, but the first set should preferably be used.

Note: — No change shall be made in the abbreviations to indicate plurality.

SCHEDULE XII

(See rule 17 (8)

S. No. Book No.

Certificate of Verification.

Receipt NO. Date.

Name of Inspector _____

I hereby certify that I have this day verified and stamped the under mentioned weights measures, etc., belonging to _____ locality, under the weights and measures (International System) Act, 1967 (V of 1967).

Qty	Denomination	Weighing – instruments	Measuring Instruments	Verification Fee Rs.	Carriage conveyance charges etc.

Total Rs. _____

Grand Total Rs. _____

Signature Inspector

Repaired by _____

Next verification is due on _____

SCHEDULE XIII

(See rule 18)

Procedure to be followed for inspection, verification and stamping of commercial weights, measures, weighing instruments and measuring instruments.

PART 1. — WEIGHTS AND MEASURES

1. Weights.

1.1 All weights before stamping shall be verified for correctness against the corresponding working standard model weight in the appropriate working model balance subject to the permissible errors specified.

1.2. All weights shall be stamped on the lead in the loading hole at the bottom of the weights, provided that weights without an adjusting hole shall be stamped on the under surface.

1.3 No weights used in gold and silver trade shall be stamped unless they are carat weights.

1.4 No weights used in Pearl and precious stone trade shall be marked unless they are carat weights.

2. Liquid Measures of Capacity.

2.1 Liquid measures of capacity standard shall be verified by filling the working model measures with water and emptying the contents of the working model into the measure under verification.

2.2. In verifying a glass measure the capacity of which is not defined by the brim, the level of the water shall be taken at the bottom of the meniscus.

2.3 Where the capacity is indicated by a line, the measure shall be verified, to the bottom of the line.

3. Measures for liquid fuel or lubricating oil, instruments, e.g. petrol pumps, flow meters, etc.

3.1 A measuring instrument shall not be stamped unless provided with one or more plugs, seals or sealing devices of suitable form and material to protect all stops or other adjustable parts affecting the quantity delivered or with such alternative sealing arrangements as the Controller may direct.

3.2 A measuring instrument shall not be stamped unless it is complete with all parts and attachments concerned in the operation of measurement and delivery.

3.3 Every measuring instrument shall be legibly marked with the name of its maker or supplier.

3.4. A measuring instrument shall not be stamped if it bears any mark which might be mistaken for an inspector's stamp or any statement or mark other than the stamp of inspector which purpose to be, or might be mistaken for, the expression of approval or guarantee of accuracy by anybody or person.

3.5. Every marking, notice, inscription or indication on a. measuring instrument having reference to the method of operation or to the quantity delivered

shall be conspicuously and legibly V marked in a suitable position in plain block characters, on a plain background and in distinct contrast thereto.

3.6. Each stop or setting device of a measuring instrument shall be marked in such a manner as to indicate the capacity it represents of shall be associated with a suitable indicating device for the same purpose.

3.7. Every indication of quantity on a measuring instrument shall be denominated either in full or by means only of one other of the abbreviation given in the rules: Provided that the indications of quantity on containers or on the dial of a sales indicator may be shown by figures only where the unit of measurement is boldly marked on the container or dial and no confusion can arise.

3.8. Every measuring instrument of fixed type shall be so disposed that the purchaser can readily obtain a clear and unobstructed view of all the operations and indications or measurement and delivery: and shall be verified and stamped when completely erected ready for use and in the situation in which will is to be used not withstanding that if may have been previously verified or stamped in some other location.

3.9. No measuring instrument ‘used: for measurement in the presence of the purchaser shall be arranged to deliver measured quantities at more than one outlet.

3.10. Every individual sale: indicator fitted to a measuring instrument shall be so arranged that it can be readily reset to “zero” and that it is not possible to advance the indication by any means other than the proper operation of the instrument.. In the instruments of the twin or multiple container type the individual sales indicator called be so arranged as not to register any measurement before discharge from each container has commenced.

3.11. No audible or other signals of discharge which can be operated to signal before the movement of the individual sales indicator shall be fitted to any measuring instrument.

3.12. Every graduated scale or other indicating device of a measuring Instrument shall be denominated in numerical sequence reading in one direction only.

3.13. Where a measuring instrument is provided with a swing arm or of extension pipe such arm or pipe shall be so constructed as either -

(a) to empty itself completely through the delivery outlet,

(b) to remain permanently filled up its connection to the flexible hose.

In the latter case, the sight glass shall be fitted at the highest point of the swing arm or extension pipe, immediately before the connection to the flexible hose..

3.14. No measuring instrument shall be fitte4 with a flexible discharged hose exceeding 4 meters in length.

3.15. No nozzle of a form liable where open to trap any portion of the liquid being delivered shall be attached to die discharge hose of any measuring instrument.

3.16. Before verifying any measuring instrument fitted with a dis. change hose, the Inspector shall see that the liquid has fist been passed through the instrument so that the discharge hose has been wetted.

3.17. Every measuring instrument of the piston type shall be fitted with an adequate sight glass or other device approved by the Controller for showing clearly

that the instrument is properly primed before use and shall bear, adjacent to the sight glass, a notice in one or other of the, following forms indicating the priming level:

PRIMING LEVEL	OR	LIQUID MUST ALWAYS SHOW AT THIS MARK

Provided that this rule shall not apply to instruments used for the measurement of lubricant oils where the delivery system remains permanently full up to the extremity of the discharge pipe.

3.18. A measuring instrument of the piston type before being tested for accuracy shall be tested for leakage by being first primed. If it is evident after the lapse of a reasonable interval of time that no measurable leakage is occurring, the Inspector may proceed to test for accuracy.

3.19. On verification or re-verification the permissible in measuring instruments both on any individual delivery and on the total quantity delivered by a complete cycle of operation of the instrument shall not exceed 6 ml per Liter On inspection half the above error shall be allowed in deficiency and twice the above error in excess 1r measuring instrument shall deliver correctly within the above limits of errors at any reasonable speed of operation provided that for any single delivery the speed of operation shall be as uniform as practicable.

3.20. Any liquid fuel or lubricating oil withdrawn from any, tank or container for the purpose of an Inspector's test of a measuring instrument shall be forthwith returned to the tank or container from which it was withdrawn, and the Inspector shall, if requested furnish to the person .in charge of the instrument a signed statement of the quantities so withdraw and returned.'

Note.—If any person refuses to an Inspector the use of such liquid fuel or lubricating oil as he may require for the purpose of testing any measuring instrument, such refusal shall be deemed to be obstruction in the discharge of the duties of the Inspector.

4. Measure of Length.

4.1. Every measure of length shall be verified by comparison with the working standard model.

4.2. A link measure, r woven metallic or steel tape measure shall be tested when subjected to a tension or pull as follows: —

Link Measure	…	…	8 kg
Woven Metallic Tape Measure	…	…	1 Kg
Steel Tape Measure	…	…	5 Kg

4.3. The measure under verification shall be supported throughout it whole length on a plane and even base.

4.4. Tape measures which are intended to be used in cases may be accepted for verification and stamping if submitted even without the case.

4.5. All non-flexible measures of length shall be stamped 'on the rivets provided in the measure.

4.6. In the case of tape measure, the stamp shall be placed on the metal strip at the beginning of them measure.

4.7. In the case of link measures, the stamp shall be placed either on a metal label or disc permanently attached to the measure or on the brass handle.

5. Volume Measures.

5.1. All measures of volume shall be examined with the object of discovering flaws or want of straightness and roper right angles at the corners.

5.2. Every measure of volume shall be verified by- comparing length of each side against the working standard of length of or near the normal temperature..

5.3. The limits of errors in the case of lengths of the sides of measures of volume shall be the same as prescribed for linear measures.

5.4 All measures of volume shall be stamped near the top edge or brass plate securely fastened to them.

PART II.— WEIGHING INSTRUMENTS AND MEASURING INSTRUMENTS

1. General

Weighing instruments and measuring instruments shall be verified to conform to the specification given in schedule VI.

2. Beam Scales

2.1 On beam scales, the verification stamps shall be placed on the stud or plug on the beam, immediately under or over the central knife edge.

2.2 The Inspector may stamp the plug or stud in the same manner as he would stamp a weight.

3. Counter machines, spring balances, steelyards and automatic machines

The verification stamp shall be placed upon the plug or stud provided in the instrument for that purpose.

4. Platform machines and weigh-bridges:

4.1 Weigh-bridges, platform machines and such other weighing instruments as the Controller may specify in this behalf, shall be verified and stamped in situ in addition to any preliminary test in the manufacturer's or dealer's premises. Such a preliminary verification shall be made at the request of the manufacturer or dealer.

4.2 The verification stamp shall be placed upon the plug or stud provided for the purpose in the machine.

5. Crane Machines.

5.1 Hydraulic machine in which it is necessary, in order to get a correct weight indication, to twist the load hook shall not be stamped unless a prominent notice to effect is permanently affixed to the machine.

5.2 The verification stamp shall e placed upon the plug or stud provided for the purpose in the machine.

SCHEDULE XIV

(See rule 25)

TABLE NO. 1

Denomination		Value	Abbreviation
1. Weights			
Tonne	. . . . .	1,000 kg	t
Quintal	. . . . .	100 kg	q
Kilogram	. . . . .	1,000 g	kg
Gram	. . . . .	1 g	g
Milligram	. . . . .	0.001 or $(10)^{-3}$ g	mg
Carat	. . . . .	200 mg	c
2. Length			
Killometer	. . . . .	1,000 m	km
Meter	. . . . .	1 m	m
Centimeter	. . . . .	0.01 or $(10)^{-2}$ m	cm
Millimeter	. . . . .	0.001 or $(10)^{-3}$ m	mm
3. Capacity.			
KilloLiter	. . . . .	1,000 1	ki
Liter	. . . . .	1.1	l
Milliliter	. . . . .	0.001 or $(10)^{-3}$ 1	ml

TABLE NO. 2

CONVERSION FACTORS

1. Weights		
1 tola	. . . . .	11.6638 gram nearest to gram
1 chbattank	. . . . .	58.324 gram nearest to gram
1 seer	. . . . .	933.10 gram nearest to gram
1 maund	. . . . .	37.324 kg nearest to kilogram
1 ounce	. . . . .	0.373242 quintal 28.3495 gram
1 lb	. . . . .	453.5924 gram
1 cwt	. . . . .	50.802 kilogram
1 ton	. . . . .	1 metric Ton (+) 16 kilogram
1 gram	. . . . .	0.0352740 Ounce – 0.085735 tola
1 kilogram		2.20462 Pounds = 1.07169 seers
1 metric tonne		0.98421 Ton = 26.7923 maunds
II. Linear Measures		
1 inch		25.40 millimeter
1 foot		30.48 centimeter
1 yard		0.9144 meter
1 mile		1.609344 kilometer
1 centimeter		0.393701 inch
1 meter		1.09361 yard
1 kilometer		0.62137 mile
III. Capacity Measures		
1 pint		0.56824 Liter
1 quart		1.13649 Liter
1 gallon (1mp)		4.54596 Liter
1 gallon (Us)		3.78533 Liter
1 Liter		1.75980 pint
1 Liter		0.87990 quart
1 Liter		0.219976 gallon (imp)

TABLE NO. 3

TOLAS, CHHATTANKS, SEERS AND MAUNDS TO SI UNITS

Conversion Factors	. . .	. . .		1 tola 1 seer 1 maund	= 11.6638 gram = 0.93310 kilogram = 37.324 kg		
Total					Gram (g) + Milligram (mg)		
1	. . .	. . .	. . .	. . .	. . .	11	664
2	. . .	. . .	. . .	. . .	. . .	23	330
3	. . .	. . .	. . .	. . .	. . .	34	990
4	. . .	. . .	. . .	. . .	. . .	46	660
5	. . .	. . .	. . .	. . .	. . .	58	320

Chhattank							Gram (Nearest to gram)	
1	. . .	. . .	. . .	. . .	. . .	. . .	. . .	58
2	. . .	. . .	. . .	. . .	. . .	. . .	. . .	117
3	. . .	. . .	. . .	. . .	. . .	. . .	. . .	175
4	. . .	. . .	. . .	. . .	. . .	. . .	. . .	233
5	. . .	. . .	. . .	. . .	. . .	. . .	. . .	292
6	. . .	. . .	. . .	. . .	. . .	. . .	. . .	350
7	. . .	. . .	. . .	. . .	. . .	. . .	. . .	408
8	. . .	. . .	. . .	. . .	. . .	. . .	. . .	467
9	. . .	. . .	. . .	. . .	. . .	. . .	. . .	525
10	. . .	. . .	. . .	. . .	. . .	. . .	. . .	583
11	. . .	. . .	. . .	. . .	. . .	. . .	. . .	642
12	. . .	. . .	. . .	. . .	. . .	. . .	. . .	700
13	. . .	. . .	. . .	. . .	. . .	. . .	. . .	758
14	. . .	. . .	. . .	. . .	. . .	. . .	. . .	816
15	. . .	. . .	. . .	. . .	. . .	. . .	. . .	875
16	. . .	. . .	. . .	. . .	. . .	. . .	. . .	933

Seer							Kilogram (kg)	Gram (g)
1	. . .	. . .	. . .	. . .	. . .	. . .	0	933
2	. . .	. . .	. . .	. . .	. . .	. . .	1	866
3	. . .	. . .	. . .	. . .	. . .	. . .	2	799
4	. . .	. . .	. . .	. . .	. . .	. . .	3	732
5	. . .	. . .	. . .	. . .	. . .	. . .	4	666
6	. . .	. . .	. . .	. . .	. . .	. . .	5	599
7	. . .	. . .	. . .	. . .	. . .	. . .	6	532
8	. . .	. . .	. . .	. . .	. . .	. . .	7	465
9	. . .	. . .	. . .	. . .	. . .	. . .	8	398

10	. . .	. . .	. . .	. . .	. . .	. . .	9	331
11	. . .	. . .	. . .	. . .	. . .	. . .	10	264
12	. . .	. . .	. . .	. . .	. . .	. . .	11	197
13	. . .	. . .	. . .	. . .	. . .	. . .	12	130
14	. . .	. . .	. . .	. . .	. . .	. . .	13	63
15	. . .	. . .	. . .	. . .	. . .	. . .	13	997
16	. . .	. . .	. . .	. . .	. . .	. . .	14	930
17	. . .	. . .	. . .	. . .	. . .	. . .	15	863
18	. . .	. . .	. . .	. . .	. . .	. . .	16	796
19	. . .	. . .	. . .	. . .	. . .	. . .	17	729
20	. . .	. . .	. . .	. . .	. . .	. . .	18	662
21	. . .	. . .	. . .	. . .	. . .	. . .	19	595
22	. . .	. . .	. . .	. . .	. . .	. . .	20	528
23	. . .	. . .	. . .	. . .	. . .	. . .	21	461
24	. . .	. . .	. . .	. . .	. . .	. . .	22	395
25	. . .	. . .	. . .	. . .	. . .	. . .	23	328
26	. . .	. . .	. . .	. . .	. . .	. . .	24	261
27	. . .	. . .	. . .	. . .	. . .	. . .	25	194
28	. . .	. . .	. . .	. . .	. . .	. . .	26	127
29	. . .	. . .	. . .	. . .	. . .	. . .	27	60
30	. . .	. . .	. . .	. . .	. . .	. . .	27	993
31	. . .	. . .	. . .	. . .	. . .	. . .	28	926
32	. . .	. . .	. . .	. . .	. . .	. . .	29	859
33	. . .	. . .	. . .	. . .	. . .	. . .	30	792
34	. . .	. . .	. . .	. . .	. . .	. . .	31	726
35	. . .	. . .	. . .	. . .	. . .	. . .	32	659
36	. . .	. . .	. . .	. . .	. . .	. . .	33	592
37	. . .	. . .	. . .	. . .	. . .	. . .	34	525
38	. . .	. . .	. . .	. . .	. . .	. . .	35	458
39	. . .	. . .	. . .	. . .	. . .	. . .	36	391
40	. . .	. . .	. . .	. . .	. . .	. . .	37	324

Maund							Kilogram (kg) +	Gram (g)
1	. . .	. . .	. . .	. . .	. . .	. . .	37	320
2	. . .	. . .	. . .	. . .	. . .	. . .	74	650
3	. . .	. . .	. . .	. . .	. . .	. . .	111	970
4	. . .	. . .	. . .	. . .	. . .	. . .	149	300
5	. . .	. . .	. . .	. . .	. . .	. . .	186	620
6	. . .	. . .	. . .	. . .	. . .	. . .	223	950
7	. . .	. . .	. . .	. . .	. . .	. . .	261	270
8	. . .	. . .	. . .	. . .	. . .	. . .	298	590
9	. . .	. . .	. . .	. . .	. . .	. . .	335	920
10	. . .	. . .	. . .	. . .	. . .	. . .	373	240
20	. . .	. . .	. . .	. . .	. . .	. . .	746	480

30	. . .	. . .	. . .	. . .	. . .	. . .	1119	730
40	. . .	. . .	. . .	. . .	. . .	. . .	1492	970
50	. . .	. . .	. . .	. . .	. . .	. . .	1866	210
60	. . .	. . .	. . .	. . .	. . .	. . .	2239	450
70	. . .	. . .	. . .	. . .	. . .	. . .	2612	690
80	. . .	. . .	. . .	. . .	. . .	. . .	2985	930
90	. . .	. . .	. . .	. . .	. . .	. . .	3359	180
100	. . .	. . .	. . .	. . .	. . .	. . .	3732	420

TABLE NO. 4

OUNCE (AV.) TO SI UNITS

(Conversion Factor 1 ounce = 28.3495 grams)

Ounce							Gram (g) +	Milligram (mg)
1	. . .	. . .	. . .	. . .	. . .	. . .	28	350
2	. . .	. . .	. . .	. . .	. . .	. . .	56	699
3	. . .	. . .	. . .	. . .	. . .	. . .	85	49
4	. . .	. . .	. . .	. . .	. . .	. . .	113	398
5	. . .	. . .	. . .	. . .	. . .	. . .	141	748
6	. . .	. . .	. . .	. . .	. . .	. . .	170	97
7	. . .	. . .	. . .	. . .	. . .	. . .	198	447
8	. . .	. . .	. . .	. . .	. . .	. . .	226	796
9	. . .	. . .	. . .	. . .	. . .	. . .	255	146
10	. . .	. . .	. . .	. . .	. . .	. . .	283	495
11	. . .	. . .	. . .	. . .	. . .	. . .	311	845
12	. . .	. . .	. . .	. . .	. . .	. . .	340	194
13	. . .	. . .	. . .	. . .	. . .	. . .	368	544
14	. . .	. . .	. . .	. . .	. . .	. . .	396	893
15	. . .	. . .	. . .	. . .	. . .	. . .	425	243
16	. . .	. . .	. . .	. . .	. . .	. . .	543	592

TABLE NO. 5

POUNDS CWT AND TONS TO SI UNITS

(Conversion Factor 1 lb = 0.4535924 kg)

Pound							Kilogram (kg) +	Gram (g)
1	. . .	. . .	. . .	. . .	. . .	. . .	-	454
2	. . .	. . .	. . .	. . .	. . .	. . .	-	907
3	. . .	. . .	. . .	. . .	. . .	. . .	1	361
4	. . .	. . .	. . .	. . .	. . .	. . .	1	814
5	. . .	. . .	. . .	. . .	. . .	. . .	2	268
6	. . .	. . .	. . .	. . .	. . .	. . .	2	722
7	. . .	. . .	. . .	. . .	. . .	. . .	3	175
8	. . .	. . .	. . .	. . .	. . .	. . .	3	629
9	. . .	. . .	. . .	. . .	. . .	. . .	4	82
10	. . .	. . .	. . .	. . .	. . .	. . .	4	536
11	. . .	. . .	. . .	. . .	. . .	. . .	4	990
12	. . .	. . .	. . .	. . .	. . .	. . .	5	443
13	. . .	. . .	. . .	. . .	. . .	. . .	5	897
14	. . .	. . .	. . .	. . .	. . .	. . .	6	350
15	. . .	. . .	. . .	. . .	. . .	. . .	6	804
16	. . .	. . .	. . .	. . .	. . .	. . .	7	258
17	. . .	. . .	. . .	. . .	. . .	. . .	7	711
18	. . .	. . .	. . .	. . .	. . .	. . .	8	165
19	. . .	. . .	. . .	. . .	. . .	. . .	8	618
20	. . .	. . .	. . .	. . .	. . .	. . .	9	72
21	. . .	. . .	. . .	. . .	. . .	. . .	9	525
22	. . .	. . .	. . .	. . .	. . .	. . .	9	979
23	. . .	. . .	. . .	. . .	. . .	. . .	10	433
24	. . .	. . .	. . .	. . .	. . .	. . .	10	886
25	. . .	. . .	. . .	. . .	. . .	. . .	11	340
26	. . .	. . .	. . .	. . .	. . .	. . .	11	793
27	. . .	. . .	. . .	. . .	. . .	. . .	12	247
28	. . .	. . .	. . .	. . .	. . .	. . .	12	701
29	. . .	. . .	. . .	. . .	. . .	. . .	13	154
30	. . .	. . .	. . .	. . .	. . .	. . .	13	608
31	. . .	. . .	. . .	. . .	. . .	. . .	14	61
32	. . .	. . .	. . .	. . .	. . .	. . .	14	515
33	. . .	. . .	. . .	. . .	. . .	. . .	14	969
34	. . .	. . .	. . .	. . .	. . .	. . .	15	422
35	. . .	. . .	. . .	. . .	. . .	. . .	15	876
36	. . .	. . .	. . .	. . .	. . .	. . .	16	329
37	. . .	. . .	. . .	. . .	. . .	. . .	16	783
38	. . .	. . .	. . .	. . .	. . .	. . .	17	236
39	. . .	. . .	. . .	. . .	. . .	. . .	17	690
40	. . .	. . .	. . .	. . .	. . .	. . .	18	144
41	. . .	. . .	. . .	. . .	. . .	. . .	18	597
42	. . .	. . .	. . .	. . .	. . .	. . .	19	51
43	. . .	. . .	. . .	. . .	. . .	. . .	19	504
44	. . .	. . .	. . .	. . .	. . .	. . .	19	958

45	. . .	. . .	. . .	. . .	. . .	. . .	20	412
46	. . .	. . .	. . .	. . .	. . .	. . .	20	865
47	. . .	. . .	. . .	. . .	. . .	. . .	21	919
48	. . .	. . .	. . .	. . .	. . .	. . .	21	772
49	. . .	. . .	. . .	. . .	. . .	. . .	22	226
50	. . .	. . .	. . .	. . .	. . .	. . .	22	680
51	. . .	. . .	. . .	. . .	. . .	. . .	23	133
52	. . .	. . .	. . .	. . .	. . .	. . .	23	587
53	. . .	. . .	. . .	. . .	. . .	. . .	24	40
54	. . .	. . .	. . .	. . .	. . .	. . .	24	494
55	. . .	. . .	. . .	. . .	. . .	. . .	24	948
56	. . .	. . .	. . .	. . .	. . .	. . .	25	401
57	. . .	. . .	. . .	. . .	. . .	. . .	25	855
58	. . .	. . .	. . .	. . .	. . .	. . .	26	308
59	. . .	. . .	. . .	. . .	. . .	. . .	26	762
60	. . .	. . .	. . .	. . .	. . .	. . .	27	216
61	. . .	. . .	. . .	. . .	. . .	. . .	27	669
62	. . .	. . .	. . .	. . .	. . .	. . .	28	123
63	. . .	. . .	. . .	. . .	. . .	. . .	28	576
64	. . .	. . .	. . .	. . .	. . .	. . .	29	30
65	. . .	. . .	. . .	. . .	. . .	. . .	29	484
66	. . .	. . .	. . .	. . .	. . .	. . .	29	937
67	. . .	. . .	. . .	. . .	. . .	. . .	30	391
68	. . .	. . .	. . .	. . .	. . .	. . .	30	844
69	. . .	. . .	. . .	. . .	. . .	. . .	31	298
70	. . .	. . .	. . .	. . .	. . .	. . .	31	751
71	. . .	. . .	. . .	. . .	. . .	. . .	32	205
72	. . .	. . .	. . .	. . .	. . .	. . .	32	659
73	. . .	. . .	. . .	. . .	. . .	. . .	33	112
74	. . .	. . .	. . .	. . .	. . .	. . .	33	566
75	. . .	. . .	. . .	. . .	. . .	. . .	34	19
76	. . .	. . .	. . .	. . .	. . .	. . .	34	473
77	. . .	. . .	. . .	. . .	. . .	. . .	34	927
78	. . .	. . .	. . .	. . .	. . .	. . .	35	380
79	. . .	. . .	. . .	. . .	. . .	. . .	35	834
80	. . .	. . .	. . .	. . .	. . .	. . .	36	287
81	. . .	. . .	. . .	. . .	. . .	. . .	36	741
82	. . .	. . .	. . .	. . .	. . .	. . .	37	195
83	. . .	. . .	. . .	. . .	. . .	. . .	37	648
84	. . .	. . .	. . .	. . .	. . .	. . .	38	102
85	. . .	. . .	. . .	. . .	. . .	. . .	38	555
86	. . .	. . .	. . .	. . .	. . .	. . .	39	9
87	. . .	. . .	. . .	. . .	. . .	. . .	39	463
88	. . .	. . .	. . .	. . .	. . .	. . .	39	916
89	. . .	. . .	. . .	. . .	. . .	. . .	40	370
90	. . .	. . .	. . .	. . .	. . .	. . .	40	823
91	. . .	. . .	. . .	. . .	. . .	. . .	41	277
92	. . .	. . .	. . .	. . .	. . .	. . .	41	731
93	. . .	. . .	. . .	. . .	. . .	. . .	42	184

94	. . .	. . .	. . .	. . .	. . .	. . .	42	638
95	. . .	. . .	. . .	. . .	. . .	. . .	43	91
96	. . .	. . .	. . .	. . .	. . .	. . .	43	545
97	. . .	. . .	. . .	. . .	. . .	. . .	43	998
98	. . .	. . .	. . .	. . .	. . .	. . .	44	452
99	. . .	. . .	. . .	. . .	. . .	. . .	44	906
100	. . .	. . .	. . .	. . .	. . .	. . .	45	359
200	. . .	. . .	. . .	. . .	. . .	. . .	90	720
300	. . .	. . .	. . .	. . .	. . .	. . .	136	80
400	. . .	. . .	. . .	. . .	. . .	. . .	181	440
500	. . .	. . .	. . .	. . .	. . .	. . .	226	800
600	. . .	. . .	. . .	. . .	. . .	. . .	272	160
700	. . .	. . .	. . .	. . .	. . .	. . .	317	510
800	. . .	. . .	. . .	. . .	. . .	. . .	362	870
900	. . .	. . .	. . .	. . .	. . .	. . .	408	230
1000	. . .	. . .	. . .	. . .	. . .	. . .	453	590

Hundred Weight							Kilogram (kg) +	Gram (g)
1	. . .	. . .	. . .	. . .	. . .	. . .	50	800
2	. . .	. . .	. . .	. . .	. . .	. . .	101	600
3	. . .	. . .	. . .	. . .	. . .	. . .	152	410
4	. . .	. . .	. . .	. . .	. . .	. . .	203	210
5	. . .	. . .	. . .	. . .	. . .	. . .	254	10
6	. . .	. . .	. . .	. . .	. . .	. . .	304	810
7	. . .	. . .	. . .	. . .	. . .	. . .	355	620
8	. . .	. . .	. . .	. . .	. . .	. . .	406	420
9	. . .	. . .	. . .	. . .	. . .	. . .	457	220
10	. . .	. . .	. . .	. . .	. . .	. . .	508	20
11	. . .	. . .	. . .	. . .	. . .	. . .	558	830
12	. . .	. . .	. . .	. . .	. . .	. . .	609	630
13	. . .	. . .	. . .	. . .	. . .	. . .	660	430
14	. . .	. . .	. . .	. . .	. . .	. . .	711	230
15	. . .	. . .	. . .	. . .	. . .	. . .	762	40
16	. . .	. . .	. . .	. . .	. . .	. . .	812	840
17	. . .	. . .	. . .	. . .	. . .	. . .	863	640
18	. . .	. . .	. . .	. . .	. . .	. . .	914	440
19	. . .	. . .	. . .	. . .	. . .	. . .	965	250
20	. . .	. . .	. . .	. . .	. . .	. . .	1016	50

Ton							Metric ton (t) +	Kilogram (kg)
1	. . .	. . .	. . .	. . .	. . .	. . .	1	16
2	. . .	. . .	. . .	. . .	. . .	. . .	2	32
3	. . .	. . .	. . .	. . .	. . .	. . .	3	48
4	. . .	. . .	. . .	. . .	. . .	. . .	4	64
5	. . .	. . .	. . .	. . .	. . .	. . .	5	80
6	. . .	. . .	. . .	. . .	. . .	. . .	6	96
7	. . .	. . .	. . .	. . .	. . .	. . .	7	192
8	. . .	. . .	. . .	. . .	. . .	. . .	8	128
9	. . .	. . .	. . .	. . .	. . .	. . .	9	144
10	. . .	. . .	. . .	. . .	. . .	. . .	10	160
20	. . .	. . .	. . .	. . .	. . .	. . .	20	321
30	. . .	. . .	. . .	. . .	. . .	. . .	30	481
40	. . .	. . .	. . .	. . .	. . .	. . .	40	642
60	. . .	. . .	. . .	. . .	. . .	. . .	50	802
60	. . .	. . .	. . .	. . .	. . .	. . .	60	963
70	. . .	. . .	. . .	. . .	. . .	. . .	71	123
80	. . .	. . .	. . .	. . .	. . .	. . .	81	284
90	. . .	. . .	. . .	. . .	. . .	. . .	91	444
100	. . .	. . .	. . .	. . .	. . .	. . .	101	605
200	. . .	. . .	. . .	. . .	. . .	. . .	203	209
300	. . .	. . .	. . .	. . .	. . .	. . .	304	814
400	. . .	. . .	. . .	. . .	. . .	. . .	406	419
500	. . .	. . .	. . .	. . .	. . .	. . .	508	24
600	. . .	. . .	. . .	. . .	. . .	. . .	609	628
700	. . .	. . .	. . .	. . .	. . .	. . .	711	233
800	. . .	. . .	. . .	. . .	. . .	. . .	812	838
900	. . .	. . .	. . .	. . .	. . .	. . .	924	445
1000	. . .	. . .	. . .	. . .	. . .	. . .	1016	442

TABLE NO. 6

FL. OUNCES, GILLS, PINTS, QUARTS AND GALLONS TO SI UNITS

(Conversion Factor 1 Gallon Imperial = 4.54596 Liter)

FL. Oz.		Milliliter (ml) (Nearest to ml)
1	. . . . .	28
2	. . . . .	57
3	. . . . .	85
4	. . . . .	114
5	. . . . .	142

Gill		Milliliter (Nearest to ml)
1	. . . . .	142
2	. . . . .	284
3	. . . . .	426
4	. . . . .	568

Pint		Liter (l)	Milliliter (ml)
1	. . . . .		568
2	. . . . .		136

Quart		Liter (l)	Milliliter (Nearest to ml)
1	. . . . .	1	136
2	. . . . .	2	273
3	. . . . .	3	409
4	. . . . .	4	546

Gallon		Liter (l)	+ Milliliter (Nearest to ml)
1	. . . . .	4	550
2	. . . . .	9	90
3	. . . . .	13	640

4	. . .	. . .	. . .	. . .	. . .	. . .	. . .	. . .	18	180
5	. . .	. . .	. . .	. . .	. . .	. . .	. . .	. . .	22	730
6	. . .	. . .	. . .	. . .	. . .	. . .	. . .	. . .	27	280
7	. . .	. . .	. . .	. . .	. . .	. . .	. . .	. . .	31	820
8	. . .	. . .	. . .	. . .	. . .	. . .	. . .	. . .	36	370
9	. . .	. . .	. . .	. . .	. . .	. . .	. . .	. . .	40	910
10	. . .	. . .	. . .	. . .	. . .	. . .	. . .	. . .	45	460
20	. . .	. . .	. . .	. . .	. . .	. . .	. . .	. . .	90	020
30	. . .	. . .	. . .	. . .	. . .	. . .	. . .	. . .	136	379
40	. . .	. . .	. . .	. . .	. . .	. . .	. . .	. . .	181	838
50	. . .	. . .	. . .	. . .	. . .	. . .	. . .	. . .	227	300
60	. . .	. . .	. . .	. . .	. . .	. . .	. . .	. . .	272	758
70	. . .	. . .	. . .	. . .	. . .	. . .	. . .	. . .	318	217
80	. . .	. . .	. . .	. . .	. . .	. . .	. . .	. . .	363	677
90	. . .	. . .	. . .	. . .	. . .	. . .	. . .	. . .	409	136
100	. . .	. . .	. . .	. . .	. . .	. . .	. . .	. . .	454	600

TABLE NO. 7

INCHES, FEET, YARDS, FURLONGS AND MILES TO SI UNIT

(Conversion Factor 1 inch = 24.4 Millimeter)

Quart									Centimeter +	Milliliter (Nearest to ml)
									(cm)	(mm)
1	. . .	. . .	. . .	. . .	. . .	. . .	. . .	. . .	2	5
2	. . .	. . .	. . .	. . .	. . .	. . .	. . .	. . .	5	1
3	. . .	. . .	. . .	. . .	. . .	. . .	. . .	. . .	7	6
4	. . .	. . .	. . .	. . .	. . .	. . .	. . .	. . .	10	2
5	. . .	. . .	. . .	. . .	. . .	. . .	. . .	. . .	12	7
6	. . .	. . .	. . .	. . .	. . .	. . .	. . .	. . .	15	2
7	. . .	. . .	. . .	. . .	. . .	. . .	. . .	. . .	17	8
8	. . .	. . .	. . .	. . .	. . .	. . .	. . .	. . .	20	3
9	. . .	. . .	. . .	. . .	. . .	. . .	. . .	. . .	22	9
10	. . .	. . .	. . .	. . .	. . .	. . .	. . .	. . .	25	4
11	. . .	. . .	. . .	. . .	. . .	. . .	. . .	. . .	27	9
12	. . .	. . .	. . .	. . .	. . .	. . .	. . .	. . .	30	5

Feet									Meter (m) +	Milliliter (Nearest to ml)
1	. . .	. . .	. . .	. . .	. . .	. . .	. . .	. . .		30
2	. . .	. . .	. . .	. . .	. . .	. . .	. . .	. . .		61
3	. . .	. . .	. . .	. . .	. . .	. . .	. . .	. . .		91

Yards									Meter (m) +	(Nearest to cm)
1	. . .	. . .	. . .	. . .	. . .	. . .	. . .	. . .	-	91
2	. . .	. . .	. . .	. . .	. . .	. . .	. . .	. . .	1	83
3	. . .	. . .	. . .	. . .	. . .	. . .	. . .	. . .	2	74
4	. . .	. . .	. . .	. . .	. . .	. . .	. . .	. . .	3	66
5	. . .	. . .	. . .	. . .	. . .	. . .	. . .	. . .	4	57
6	. . .	. . .	. . .	. . .	. . .	. . .	. . .	. . .	5	49
7	. . .	. . .	. . .	. . .	. . .	. . .	. . .	. . .	6	40
8	. . .	. . .	. . .	. . .	. . .	. . .	. . .	. . .	7	32
9	. . .	. . .	. . .	. . .	. . .	. . .	. . .	. . .	8	23
10	. . .	. . .	. . .	. . .	. . .	. . .	. . .	. . .	9	14
20	. . .	. . .	. . .	. . .	. . .	. . .	. . .	. . .	18	29
30	. . .	. . .	. . .	. . .	. . .	. . .	. . .	. . .	27	43
40	. . .	. . .	. . .	. . .	. . .	. . .	. . .	. . .	36	58
50	. . .	. . .	. . .	. . .	. . .	. . .	. . .	. . .	45	72
60	. . .	. . .	. . .	. . .	. . .	. . .	. . .	. . .	54	86
70	. . .	. . .	. . .	. . .	. . .	. . .	. . .	. . .	64	1
80	. . .	. . .	. . .	. . .	. . .	. . .	. . .	. . .	73	15
90	. . .	. . .	. . .	. . .	. . .	. . .	. . .	. . .	82	30
100	. . .	. . .	. . .	. . .	. . .	. . .	. . .	. . .	91	44

Yards										Meter (m) (Nearest to m)
100	. . .	. . .	. . .	. . .	. . .	. . .	. . .	. . .	. . .	91
200	. . .	. . .	. . .	. . .	. . .	. . .	. . .	. . .	. . .	183
300	. . .	. . .	. . .	. . .	. . .	. . .	. . .	. . .	. . .	274
400	. . .	. . .	. . .	. . .	. . .	. . .	. . .	. . .	. . .	366
500	. . .	. . .	. . .	. . .	. . .	. . .	. . .	. . .	. . .	457
600	. . .	. . .	. . .	. . .	. . .	. . .	. . .	. . .	. . .	549
700	. . .	. . .	. . .	. . .	. . .	. . .	. . .	. . .	. . .	640
800	. . .	. . .	. . .	. . .	. . .	. . .	. . .	. . .	. . .	732
900	. . .	. . .	. . .	. . .	. . .	. . .	. . .	. . .	. . .	823
1000	. . .	. . .	. . .	. . .	. . .	. . .	. . .	. . .	. . .	914

Furlongs								Kilometer (km)	Meter (m) (nearest to m)
1	. . .	. . .	. . .	. . .	. . .	. . .	. . .	. . .	201
2	. . .	. . .	. . .	. . .	. . .	. . .	. . .	. . .	402
3	. . .	. . .	. . .	. . .	. . .	. . .	. . .	. . .	604
4	. . .	. . .	. . .	. . .	. . .	. . .	. . .	. . .	805
5	. . .	. . .	. . .	. . .	. . .	. . .	. . .	1	6
6	. . .	. . .	. . .	. . .	. . .	. . .	. . .	1	207
7	. . .	. . .	. . .	. . .	. . .	. . .	. . .	1	408
8	. . .	. . .	. . .	. . .	. . .	. . .	. . .	1	609

Miles								Kilometers (km)	Meter (m) (nearest to m)
1	. . .	. . .	. . .	. . .	. . .	. . .	. . .	1	610
2	. . .	. . .	. . .	. . .	. . .	. . .	. . .	3	220
3	. . .	. . .	. . .	. . .	. . .	. . .	. . .	4	830
4	. . .	. . .	. . .	. . .	. . .	. . .	. . .	6	440
5	. . .	. . .	. . .	. . .	. . .	. . .	. . .	8	050
6	. . .	. . .	. . .	. . .	. . .	. . .	. . .	9	660
7	. . .	. . .	. . .	. . .	. . .	. . .	. . .	11	270
8	. . .	. . .	. . .	. . .	. . .	. . .	. . .	12	870
9	. . .	. . .	. . .	. . .	. . .	. . .	. . .	14	480
10	. . .	. . .	. . .	. . .	. . .	. . .	. . .	16	090
20	. . .	. . .	. . .	. . .	. . .	. . .	. . .	32	190
30	. . .	. . .	. . .	. . .	. . .	. . .	. . .	48	280
40	. . .	. . .	. . .	. . .	. . .	. . .	. . .	64	370
50	. . .	. . .	. . .	. . .	. . .	. . .	. . .	80	470
60	. . .	. . .	. . .	. . .	. . .	. . .	. . .	96	560
70	. . .	. . .	. . .	. . .	. . .	. . .	. . .	112	650
80	. . .	. . .	. . .	. . .	. . .	. . .	. . .	128	750
90	. . .	. . .	. . .	. . .	. . .	. . .	. . .	144	840
100	. . .	. . .	. . .	. . .	. . .	. . .	. . .	160	930
200	. . .	. . .	. . .	. . .	. . .	. . .	. . .	321	870
300	. . .	. . .	. . .	. . .	. . .	. . .	. . .	412	800
400	. . .	. . .	. . .	. . .	. . .	. . .	. . .	643	740
500	. . .	. . .	. . .	. . .	. . .	. . .	. . .	804	670
600	. . .	. . .	. . .	. . .	. . .	. . .	. . .	965	610

Miles								Kilometers (km)	Meter (m) (nearest to m)
700	. . .	. . .	. . .	. . .	. . .	. . .	. . .	1,126	540
800	. . .	. . .	. . .	. . .	. . .	. . .	. . .	1,287	470
900	. . .	. . .	. . .	. . .	. . .	. . .	. . .	1,448	410
1000	. . .	. . .	. . .	. . .	. . .	. . .	. . .	1,609	340

TABLE NO. 8
KILOGRAM TO SEERS AND TOLAS
(Conversation Factor 1 kg = 1.07169 Seer)

Kilograms (kg)								Seers	+	Total
1	. . .	. . .	. . .	. . .	. . .	. . .	. . .	1		6
2	. . .	. . .	. . .	. . .	. . .	. . .	. . .	2		11
3	. . .	. . .	. . .	. . .	. . .	. . .	. . .	3		17
4	. . .	. . .	. . .	. . .	. . .	. . .	. . .	4		23
5	. . .	. . .	. . .	. . .	. . .	. . .	. . .	5		29
6	. . .	. . .	. . .	. . .	. . .	. . .	. . .	6		34
7	. . .	. . .	. . .	. . .	. . .	. . .	. . .	7		40
8	. . .	. . .	. . .	. . .	. . .	. . .	. . .	8		46
9	. . .	. . .	. . .	. . .	. . .	. . .	. . .	9		52
10	. . .	. . .	. . .	. . .	. . .	. . .	. . .	10		57
20	. . .	. . .	. . .	. . .	. . .	. . .	. . .	21		35
30	. . .	. . .	. . .	. . .	. . .	. . .	. . .	33		12
40	. . .	. . .	. . .	. . .	. . .	. . .	. . .	42		69
50	. . .	. . .	. . .	. . .	. . .	. . .	. . .	53		47
60	. . .	. . .	. . .	. . .	. . .	. . .	. . .	64		24
70	. . .	. . .	. . .	. . .	. . .	. . .	. . .	75		1
80	. . .	. . .	. . .	. . .	. . .	. . .	. . .	85		59
90	. . .	. . .	. . .	. . .	. . .	. . .	. . .	96		36
100	. . .	. . .	. . .	. . .	. . .	. . .	. . .	107		14
110	. . .	. . .	. . .	. . .	. . .	. . .	. . .	117		71
120	. . .	. . .	. . .	. . .	. . .	. . .	. . .	128		48
130	. . .	. . .	. . .	. . .	. . .	. . .	. . .	139		26
140	. . .	. . .	. . .	. . .	. . .	. . .	. . .	150		3
150	. . .	. . .	. . .	. . .	. . .	. . .	. . .	160		60
160	. . .	. . .	. . .	. . .	. . .	. . .	. . .	171		38
170	. . .	. . .	. . .	. . .	. . .	. . .	. . .	182		15
180	. . .	. . .	. . .	. . .	. . .	. . .	. . .	192		72
190	. . .	. . .	. . .	. . .	. . .	. . .	. . .	203		50
200	. . .	. . .	. . .	. . .	. . .	. . .	. . .	214		27
300	. . .	. . .	. . .	. . .	. . .	. . .	. . .	321		41
400	. . .	. . .	. . .	. . .	. . .	. . .	. . .	428		54
500	. . .	. . .	. . .	. . .	. . .	. . .	. . .	535		68
600	. . .	. . .	. . .	. . .	. . .	. . .	. . .	643		1
700	. . .	. . .	. . .	. . .	. . .	. . .	. . .	750		15
800	. . .	. . .	. . .	. . .	. . .	. . .	. . .	857		28
900	. . .	. . .	. . .	. . .	. . .	. . .	. . .	964		42
1000	. . .	. . .	. . .	. . .	. . .	. . .	. . .	1,071		55

TABLE NO. 9

KILOGRAM TO POUNDS AND OUNCES

(Conversation Factor 1 kg = 2.20462 lbs)

Kilograms (kg)								Pounds	+	Ounces
1	. . .	. . .	. . .	. . .	. . .	. . .	. . .	2		3
2	. . .	. . .	. . .	. . .	. . .	. . .	. . .	4		7
3	. . .	. . .	. . .	. . .	. . .	. . .	. . .	6		10
4	. . .	. . .	. . .	. . .	. . .	. . .	. . .	8		13
5	. . .	. . .	. . .	. . .	. . .	. . .	. . .	11		0
6	. . .	. . .	. . .	. . .	. . .	. . .	. . .	13		4
7	. . .	. . .	. . .	. . .	. . .	. . .	. . .	15		7
8	. . .	. . .	. . .	. . .	. . .	. . .	. . .	17		10
9	. . .	. . .	. . .	. . .	. . .	. . .	. . .	19		13
10	. . .	. . .	. . .	. . .	. . .	. . .	. . .	22		1
20	. . .	. . .	. . .	. . .	. . .	. . .	. . .	44		1
30	. . .	. . .	. . .	. . .	. . .	. . .	. . .	66		2
40	. . .	. . .	. . .	. . .	. . .	. . .	. . .	88		3
50	. . .	. . .	. . .	. . .	. . .	. . .	. . .	110		4
60	. . .	. . .	. . .	. . .	. . .	. . .	. . .	132		4
70	. . .	. . .	. . .	. . .	. . .	. . .	. . .	154		5
80	. . .	. . .	. . .	. . .	. . .	. . .	. . .	176		6
90	. . .	. . .	. . .	. . .	. . .	. . .	. . .	198		7
100	. . .	. . .	. . .	. . .	. . .	. . .	. . .	220		7
200	. . .	. . .	. . .	. . .	. . .	. . .	. . .	440		15
300	. . .	. . .	. . .	. . .	. . .	. . .	. . .	661		6
400	. . .	. . .	. . .	. . .	. . .	. . .	. . .	881		14
500	. . .	. . .	. . .	. . .	. . .	. . .	. . .	1,102		5
600	. . .	. . .	. . .	. . .	. . .	. . .	. . .	1,322		12
700	. . .	. . .	. . .	. . .	. . .	. . .	. . .	1,543		4
800	. . .	. . .	. . .	. . .	. . .	. . .	. . .	1,763		11
900	. . .	. . .	. . .	. . .	. . .	. . .	. . .	1,984		3
1000	. . .	. . .	. . .	. . .	. . .	. . .	. . .	2,004		10

TABLE NO. 10

LITER TO GALLONS (IMP.) AND PINTS

(Conversation Factor 1 Liter = 0.219976 Gallons (Imp.)

Liter (l)								Gallons	+	Pints
1	. . .	. . .	. . .	. . .	. . .	. . .	. . .	0		2
2	. . .	. . .	. . .	. . .	. . .	. . .	. . .	0		4
3	. . .	. . .	. . .	. . .	. . .	. . .	. . .	0		5
4	. . .	. . .	. . .	. . .	. . .	. . .	. . .	0		7
5	. . .	. . .	. . .	. . .	. . .	. . .	. . .	1		1
6	. . .	. . .	. . .	. . .	. . .	. . .	. . .	1		3
7	. . .	. . .	. . .	. . .	. . .	. . .	. . .	1		4
8	. . .	. . .	. . .	. . .	. . .	. . .	. . .	1		6
9	. . .	. . .	. . .	. . .	. . .	. . .	. . .	2		0
10	. . .	. . .	. . .	. . .	. . .	. . .	. . .	2		2
20	. . .	. . .	. . .	. . .	. . .	. . .	. . .	4		3
30	. . .	. . .	. . .	. . .	. . .	. . .	. . .	6		5
40	. . .	. . .	. . .	. . .	. . .	. . .	. . .	8		6
50	. . .	. . .	. . .	. . .	. . .	. . .	. . .	11		0
60	. . .	. . .	. . .	. . .	. . .	. . .	. . .	13		2
70	. . .	. . .	. . .	. . .	. . .	. . .	. . .	15		3
80	. . .	. . .	. . .	. . .	. . .	. . .	. . .	17		5
90	. . .	. . .	. . .	. . .	. . .	. . .	. . .	19		6
100	. . .	. . .	. . .	. . .	. . .	. . .	. . .	22		0

TABLE NO. 11

METER TO FEET AND INCHES

(Conversation Factor 1 Meter = 1.09361 Yards)

Meter (m)								Feet	+	Inches
1	. . .	. . .	. . .	. . .	. . .	. . .	. . .	3		3
2	. . .	. . .	. . .	. . .	. . .	. . .	. . .	6		7
3	. . .	. . .	. . .	. . .	. . .	. . .	. . .	9		10
4	. . .	. . .	. . .	. . .	. . .	. . .	. . .	13		1
5	. . .	. . .	. . .	. . .	. . .	. . .	. . .	16		5
6	. . .	. . .	. . .	. . .	. . .	. . .	. . .	19		8
7	. . .	. . .	. . .	. . .	. . .	. . .	. . .	23		0
8	. . .	. . .	. . .	. . .	. . .	. . .	. . .	26		3
9	. . .	. . .	. . .	. . .	. . .	. . .	. . .	29		6
10	. . .	. . .	. . .	. . .	. . .	. . .	. . .	32		10
20	. . .	. . .	. . .	. . .	. . .	. . .	. . .	65		7
30	. . .	. . .	. . .	. . .	. . .	. . .	. . .	98		5
40	. . .	. . .	. . .	. . .	. . .	. . .	. . .	131		3
50	. . .	. . .	. . .	. . .	. . .	. . .	. . .	164		1
60	. . .	. . .	. . .	. . .	. . .	. . .	. . .	196		10
70	. . .	. . .	. . .	. . .	. . .	. . .	. . .	229		8
80	. . .	. . .	. . .	. . .	. . .	. . .	. . .	262		6
90	. . .	. . .	. . .	. . .	. . .	. . .	. . .	295		3
100	. . .	. . .	. . .	. . .	. . .	. . .	. . .	328		1
200	. . .	. . .	. . .	. . .	. . .	. . .	. . .	656		2
300	. . .	. . .	. . .	. . .	. . .	. . .	. . .	984		3
400	. . .	. . .	. . .	. . .	. . .	. . .	. . .	1,312		4
500	. . .	. . .	. . .	. . .	. . .	. . .	. . .	1,640		5
600	. . .	. . .	. . .	. . .	. . .	. . .	. . .	1,968		6
700	. . .	. . .	. . .	. . .	. . .	. . .	. . .	2,296		7
800	. . .	. . .	. . .	. . .	. . .	. . .	. . .	2,634		8
900	. . .	. . .	. . .	. . .	. . .	. . .	. . .	2,952		9
1000	. . .	. . .	. . .	. . .	. . .	. . .	. . .	3,280		10

TABLE NO. 12
KILOMETER TO MILES AND FURLONGS
(Conversation Factor 1 km = 0.62137 mile)

Kilometer								Miles	+	Furlong
1	. . .	. . .	. . .	. . .	. . .	. . .	. . .	0		5
2	. . .	. . .	. . .	. . .	. . .	. . .	. . .	1		2
3	. . .	. . .	. . .	. . .	. . .	. . .	. . .	1		7
4	. . .	. . .	. . .	. . .	. . .	. . .	. . .	2		4
5	. . .	. . .	. . .	. . .	. . .	. . .	. . .	3		1
6	. . .	. . .	. . .	. . .	. . .	. . .	. . .	3		6
7	. . .	. . .	. . .	. . .	. . .	. . .	. . .	4		3
8	. . .	. . .	. . .	. . .	. . .	. . .	. . .	5		0
9	. . .	. . .	. . .	. . .	. . .	. . .	. . .	5		5
10	. . .	. . .	. . .	. . .	. . .	. . .	. . .	6		2
20	. . .	. . .	. . .	. . .	. . .	. . .	. . .	12		3
30	. . .	. . .	. . .	. . .	. . .	. . .	. . .	18		5
40	. . .	. . .	. . .	. . .	. . .	. . .	. . .	24		7
50	. . .	. . .	. . .	. . .	. . .	. . .	. . .	31		1
60	. . .	. . .	. . .	. . .	. . .	. . .	. . .	37		2
70	. . .	. . .	. . .	. . .	. . .	. . .	. . .	43		4
80	. . .	. . .	. . .	. . .	. . .	. . .	. . .	49		6
90	. . .	. . .	. . .	. . .	. . .	. . .	. . .	55		7
100	. . .	. . .	. . .	. . .	. . .	. . .	. . .	62		1
200	. . .	. . .	. . .	. . .	. . .	. . .	. . .	124		2
300	. . .	. . .	. . .	. . .	. . .	. . .	. . .	186		3
400	. . .	. . .	. . .	. . .	. . .	. . .	. . .	248		4
500	. . .	. . .	. . .	. . .	. . .	. . .	. . .	310		5
600	. . .	. . .	. . .	. . .	. . .	. . .	. . .	372		7
700	. . .	. . .	. . .	. . .	. . .	. . .	. . .	435		0
800	. . .	. . .	. . .	. . .	. . .	. . .	. . .	497		1
900	. . .	. . .	. . .	. . .	. . .	. . .	. . .	559		2
1000	. . .	. . .	. . .	. . .	. . .	. . .	. . .	621		3

FORM ‘A’

REGISTER TO BE MAINTAINED BY THE MANUFACTURERS

S. No.	Articles Manufactured on	Detail of the Articles Manufactured	Articles got verified on (C.V. No.)	Detail of sold articles	To whom articles sold	Remarks
1	2	3	4	5	6	7

FORM ‘B’

REGISTER TO BE MAINTAINED BY THE REPAIRERS

S. No.	Receipts No.	To whom receipts issued	Receipts issued on	Articles taken from trader for repairing	Repairing charges	Articles got reverified on	C.V No.	Articles delivered to the trader on	Remarks
1	2	3	4	5	6	7	8	9	10

FORM 'C'

REGISTER TO BE MAINTAINED BY THE DEALERS

S. No.	Articles purchased from	No. of article purchased	Receipt No. with date	Articles sold on	To whom Articles sold	Receipts No.	Remarks
1	2	3	4	5	6	7	8

FORM 'D'

RECEIPT

Seized and detained the following Weights, Measures, Weighing and measuring instruments from M/s. _____ situated at _____ under section _____ of the Sind Weights and Measures (Enforcement) Act, 1975 and rules made there under.

1. _____
2. _____
3. _____
4. _____
5. _____

Inspector of Weights and

Measure ——————— Division

EXTRA ORDINARY **Registered No. S-463**

The Sindh Government Gazette

PUBLISHED BY AUTHORITY

KARACHI, SATURDAY JULY 1, 1989

PART IV-A

GOVERNMENT OF SINDH

INDUSTRIES AND MINERAL DEVELOPMENT DEPARTMENT

NOTIFICATION

Karachi, the 29the June, 1989

No. SOIV (I&MD) 1-41/88-89, with reference to the this Department Notification No. SOIV(1&MD) 1-41/88-89 dated 21st June, 1989 and in exercise of the powers conferred by section 47 of the Sindh Standard Weights and Measures Enforcement Act, 1975, the government of Sindh are pleased to direct that on and from 1st July, 1989 the Sindh Standard Weight & Measures Enforcement Rules, 1975 shall stand amended as follows:

AMENDMENTS

In Schedule X–

(i) In serial No. 5, under the heading “Capacity”.

(a) In entry 1, in column 2 for the figures “2” the figure “10” shah be substituted.

(b) In entry 2, in column 2 for the figures “3” the figures “15” shall be substituted.

(c) In entry 3, in column 2 for the figures “5” the figures “25” shall be substituted.

(d) In entry 4, in column 2 for the figures “10” the figure “50” shall be substituted.

(e) In entry 5, in column 2 for the figures “12” the figure “60” shall be substituted.

(f) In entry 6, in column 2 for the figures “20” the figure “100” shall be substituted.

(g) In entry 7, in column 2 for the figures “25” the figure “125” shall be substituted.

(h) In entry 8, in column 2 for the figures “30” the figure “15” shall be substituted.

(i) In entry 9, in column 2 for the figures “50” the figure “250” shall be substituted.

(j) In entry 5, in column 2 for the figures “60” the figure “300” shall be substituted.

(k) In entry 11, in column 2 for the figures “60” first 50 Tonne Plus Rs. 10.00 for each additional 20 Tonne or part thereof the figures “300” for the first 50 Tonne Plus Rs. 50.00 for each additional 10 ton or part thereof shall be substituted.

(ii) In serial No. 6, for the heading “MEASURING INSTRUMENT (PETROL OR FUEL PUMPS FUEL VEHICLES METERS OF FILLERS” and entries there under, the following heading and entries shall be substituted.

“MEASURING INSTRUMENTS (PETROL OR FUEL PUMPS, FUEL VEHICLES OR FILLERS (FLOW METER FEE CHARGED AFTER EVERY SIX MONTH”

Fuel Pump	Rs. 200/-

A.N.G. ABBASI
Secretary to Government of Sindh

KARACHI: PRINTED AT THE SINDH GOVT. PRESS

(1, 250) 1-7-89—III

EXTRA ORDINARY **Registered No. S-463**

The Sindh Government Gazette

PUBLISHED BY AUTHORITY

KARACHI, SUNDAY, JULY 1, 1990

PART IV-A

GOVERNMENT OF SINDH

INDUSTRIES AND MINERAL DEVELOPMENT DEPARTMENT

N O T I F I C A T I O N

Karachi, the 1st July, 1990

No. SOIII(I&MD)/12-13/89… with reference to the this Department Notification No. SOIII(I&MD)/12-13/89 dated 18th June, 1990 and in exercise of the powers conferred by section 47 of the Sindh Standard Weights and Measures Enforcement Act, 1975, the government of Sindh are pleased to direct that on and from 1st July, 1989 the Sindh Standard Weight & Measures Enforcement Rules, 1975 shall stand amended as follows:

AMENDMENTS

1. For schedule viii. The following shall be substituted:

SCHEDULE VIII
(See rule 11(2)

Licensing and renewal fees for manufacturers, repairers and dealers.

For manufacturers	1000.00 per year
For repairers	500.00 per year
For dealers	800.00 per year

2. In schedule X –

(i) In serial No. 1, under the heading “Carat Weights”,
   (a) In the first entry, in column 2 for the figures “0.50”, the figures “5.00” shall be substituted;
   (b) In the second entry, in column 2, for the figures “1.00” the figures “10.00”shall be substituted.

(ii) In serial No. 1, under the heading “Bullion Weights”,
   (a) In the first entry, in column 2 for the figures “0.50”, the figures “5.00” shall be substituted;
   (b) In the second entry, in column 2, for the figures “1.00” the figures “10.00”shall be substituted.
   (c) In the third entry, in column 2, for the figures “2.00” the figures “20.00”shall be substituted.

(d) After the third entry, amended as aforesaid the following new entries shall be added:

"Above 2 Kg. ——————— Rs. 30.00"

(iii) In serial No. 1, under the heading "Brass Weights", in serial No. 1

(a) In the first entry, in column 2, for the figures "0.50", the figures "10.00" shall be substituted;

(b) In the second entry, in column 2, for the figures "1.00" the figures "20.00"shall be substituted.

(iv) In serial No. 1, under the heading "Sheet Metal Weights"

(a) In the first entry, in column 2 for the figures "0.50", the figures "5.00" shall be substituted;

(v) In serial No. 1, under the heading "Iron and Steel Weights",

(a) In the first entry, in column 2 for the figures "0.50", the figures "5.00" shall be substituted;

(b) In the second entry, in column 2, for the figures "1.00" the figures "10.00"shall be substituted.

(c) In the third entry, in column 2, for the figures "2.00" the figures "20.00"shall be substituted.

(d) After the third entry, amended as aforesaid the following new entries shall be added:

"Above 2 Kg. ——————— Rs. 30.00"

(vi) In serial No. 1, under the heading "Liquid Capacity Measures", for the existing entries the following shall be substituted …

1 ml to 500 ml	Rs. 5.00
Above 500 ml upto 5 l	Rs. 10.00
Above 5 l upto 100 l	Rs. 20.00
Above 100 l	Rs. 20.00 for the first 100 Liters plus Rs. 20.00 for every additional 100 Liters or part thereof".

(vii) In serial No. 3, under the heading "Length measure"

(a) In the first entry, in column 2 for the figures "0.50", the figures "10.00" shall be substituted;

(b) In the second entry, in column 2, for the figures "2.00" the figures "20.00"shall be substituted.

(c) In the third entry, in column 2, for the figures "3.00" the figures "30.00"shall be substituted.

(d) In the fourth entry, in column 2, for the figures "5.00", the figures "50.00" shall be substituted.

(viii) In serial No. 4, under the heading "Liquor Measures",

(a) In the first entry, in column 2 for the figures "1.00", the figures "20.00" shall be substituted;

(b) In the second entry, in column 2, for the figures "2.00" the figures "40.00"shall be substituted.

(ix) In serial No. 5, under the heading "Weighing instruments other than beam scale of class "c", "Capacity",

(a) In the first entry, in column 2 for the figures "10.00", the figures "50.00" shall be substituted;

(b) In the second entry, in column 2, for the figures "15.00" the figures "300.00"shall be substituted.

(c) In the third entry, in column 2, for the figures "25.00" the figures "50.00"shall be substituted.

(d) In the fourth entry, in column 2, for the figures "50.00" the figures "100.00"shall be substituted.

(e) In the fifth entry, in column 2, for the figures "60.00" the figures "12.00"shall be substituted.

(f) In the sixth entry, in column 2, for the figures "100.00" the figures "200.00"shall be substituted.

(g) In the seventh entry, in column 2, for the figures "125.00" the figures "250.00"shall be substituted.

(h) In the eighth entry, in column 2, for the figures “150.00” the figures “300.00”shall be substituted.
(i) In the ninth entry, in column 2, for the figures “250.00” the figures “500.00”shall be substituted.
(j) In the tenth entry, in column 2, for the figures “300.00” the figures “600.00”shall be substituted.
(k) For the last entries, the following shall be substituted: —

“Above 50 M/T	Rs. 600.00 for the first 50 M/T plus Rs. 100.00 for each additional 10 M/T or part thereof”.

(x) In serial No. 5, under the heading “Beam Scales of “C” Class::
(a) In the first entry, in column 2 for the figures “1.00”, the figures “15.00” shall be substituted;
(b) In the second entry, in column 2, for the figures “2.00” the figures “20.00”shall be substituted.
(c) In the third entry, in column 2, for the figures “3.00” the figures “30.00”shall be substituted.
(d) In the fourth entry, in column 2, for the figures “5.00” the figures “50.00”shall be substituted.
(e) In the fifth entry, in column 2, for the figures “8.00” the figures “80.00”shall be substituted.
(f) In the sixth entry, in column 2, for the figures “10.00” the figures “100.00”shall be substituted.
(g) In the seventh entry, in column 2, for the figures “12.00” the figures “120.00”shall be substituted.
(h) In the eighth entry, in column 2, for the figures “16.00” the figures “160.00”shall be substituted.

(xi) In serial No. 6, for the existing entries “Fuel Pumps”, the following shall be substituted.

“Fuel Pump ———————— 400.00” ---------- Rs. 1000/-

(xii) In serial No. 7, under the heading “Other than petrol or Fuel Pumps”, for the exiting entries, the following shall be substituted

Fuels Lorries and Tanks including Motors –

(a)	Upto 10,000 Liter	Rs. 300.00
(b)	Above 10,000 to 20,000 Liter	Rs. 500.00
(c)	Above 20,000 to 30,000 Liter	Rs. 700.00
(d)	Above 30,000 to 40,000 Liter	Rs. 900.00
(e)	Above 40,000 Liter	Rs. 1000.00
(f)	Flow Meter	Rs. 1200.00
(g)	Motors	Rs. 1500.00

(xiii) After serial No. 7, the following serial No. 8 and entries shall be added:

“8 Electronic Measures”

(a)	Upto 50 Kg	Rs. 500.00
(b)	Above 50 kg and upto 5 M. Tones	Rs. 1000.00
(c)	Above 5 M. Tones upto 40 M. Tones	Rs. 1500.00
(d)	Above 40 M. Tones and upto 80 M. Tone	Rs. 2000.00
(e)	Above 80 M. Tones	Rs. 3000.00

NUR AHMED SHAH
Secretary to Government of Sindh

KARACHI: PRINTED AT THE SINDH GOVT. PRESS

Government of Sindh
Agriculture Livestock &
Fisheries Department

Karachi, dated the 29th May, 2001

N O T I F I C A T I O N :

No. 21(49)SO(Crops)/97–98, with reference to this Departments Notification No. 21(49)30(Crops)/97-98, dated the 30th June, 2000 and in exercise of the powers conferred by Section 47 of the Sindh Standard Weights and Measures (Enforcement) Act, 1975, the Government of Sindh are performed the direct that this Sindh Standard Weights and Measures Enforcements (Rules, 1976) shall stand amended with immediate effect as follows:

A M E N D M E N T S

In schedule X-

(a) In serial No. 5 for the figure "400.00" the figure "1000.00" shall be substituted.
(b) For serial No. 7, and entries there under the following shall be substituted:

Fuel Lorries and Tanks including Meters:

(a)	upto 10,000 Liters (Flat rate Rs. 9100 (Liters)	Rs. 600/-
(b)	above 10,000 to 20,000 Liters	Rs. 1000/-
(c)	above 20,000 to 30,000 Liters	Rs. 1500/-
(d)	above 30,000 to 40,000 Liters	Rs. 2000/-
(e)	above 40,000 Liters	Rs. 3000/-
(f)	Flew Meter	Rs. 2000/-
(g)	Master Measures	Rs. 4000/-
(h)	Motors	Rs. 2000/-

(i) for serial No. 8 and entries to the following shall be substituted:
"electronic measures (electronic/mechanical weigh bridges)"

Upto 50 kgs	Rs. 1000/-
Above 50 kgs upto 5 M.T.	Rs. 2000/-
Above 5 M.T upto 40 M.T	Rs. 3000/-
Above 40 M.T upto 80 M.T	Rs. 4000/-
Above 80 M.T	Rs. 6000/-

SECRETARY GOVERNMENT OF SINDH

No. 21(19)SO(Crops)/97/98 Karachi, dated 29th May

A copy is forwarded to:

1. Private Secretary to Governor Sindh, Karachi.
2. PS to Chief Secretary Sindh, Karachi.

3. PS to Secretary _____
4. The Commissioner (All) _____
5. The Director General, Agriculture Extension/Research and Agri: Engineering & Water Management Sindh, Hyderabad.
6. The Director, Agriculture Marketing Hyderabad.
7. The Deputy Commissioner (All) _____
8. The President, Sindh Chamber of Agriculture, Hyderabad.
9. The President, Sindh Abadgar Board, Hyderabad.
10. The Director General, Bureau of Supply & Prices, Karachi.
11. The Superintendent, Government Printing Press Sindh, Karachi for publication of above notification and supply 25 copies thereof to this Department.

SECTION OFFICER (CROPS)

A copy is also forwarded to the following:

1. P.A to Additional Secretary (Tech:) Agri: L & F Department, Karachi.
2. .A to Deputy Secretary (Admn:) (Tech: I & II) Agri: L & F Deptt: Karachi.
3. Public Relation Officer, Agri: L & F Deptt: Karachi.
4. The Director Information, Government of Sindh, Karachi.
5. The Section Officer (All) _____ Agri: L & F Deptt: Karachi.
6. The Deputy Directors, Information, Agri: L & F Deptt: Government of Sindh, Karachi.

SECTION OFFICER (CROPS)

No: DC/W/BSP/4/2001-021/ Karachi, Dated the 06-06-2001

Government of Sindh
Bureau of Supply and Prices

Copy is forwarded for information and immediately compliance to:

1. The Deputy/ Assistant Controller/Inspector Weights & Measures Sub Division/District _____.

(ALI ASGHAR JAKHARO)
Assistant Director (Admin)

EXTRA ORDINARY **Registered No. M324**

The Sindh Government Gazette

Published By Authority

KARACHI, SATURDAY AUGUST 19, 2006

PART I

GOVERNMENT OF SINDH
AGRICULTURE DEPARTMENT

N O T I F I C A T I O N

Karachi the 17th August, 2006

No. SO(A-IV)1(148)/05/BSP/W&M: In Continuation of this department's Notification SO(A-IV)1(148)/05/BSP dated the 18th July, 2006 and in exercise of the powers conferred by section 47 of the Sindh Standard Weights and Measures (Enforcement) Act, 1975, the Government of Sindh are pleased to make the following amendment in the Sindh Standard Weights and Measures (Enforcement) Rules, 1976.

A M E N D M E N T

IN SCHEDULE-X, for serial No. 6, the following shall be substituted:

"6, MEASURING INSTRUMENTS: PETROL OR FUEL PUMPS / CNG (DISPENSING UNIT) FUEL VEHICLES METERS OF FILLERS:

(a) Fuel Pump	Rs. 1000/-
(b) Compressed Natural Gas (Dispensing Unit)	Rs. 1000/-

SECRETARY TO GOVT. OF SINDH

No. S.O(A-IV) 1(148)/005/BSP/W&M
GOVERNMENT OF SINDH
AGRICULTURE DEPARTMENT
Karachi dated the 16th December, 2006

NOTIFICATION

NO. S.O(A-IV)1(148)005/BSP/W&M: In exercise of the powers conferred by Section 47 of the Sindh Standard Weights & Measures (Enforcement) Act, 1975, the Government of Sindh Proposes to make the following amendments in the Sindh Standard Weight & Measures (Enforcement) Rules 1976, which is hereby published as required by the said section for the information of all persons likely to be affected thereby and notice is hereby given that objections and suggestions, if any, with respect thereof, may be sent to the Secretary to Government of Sindh, Agriculture, Department, Karachi, within a period of seven days of publication in the official gazette which shall be taken into consideration after the expiry of the period:

A M E N D M E N T S

1. In rule 8, after sub-rule (3) the following new rules shall be inserted:-

   "3–A(1) An occupier of owner of CNG dispensing units shall install and use such units so as to deliver and sell CNG in mass.

   (2) An inspector shall have power to check and stamp every such dispensing units with the stamp supplied by the Controller for the purpose indicating the area in which such units is installed".

2. In Schedule-XIII, in clause 3.19 the full stop at the end shall be replaced by a colon and thereafter the following proviso shall be added:

   "Provided that in the case of C.N.G Dispensing Units, the maximum pressure at the time of delivery of sale shall be maintained 200 bars with permissible error of 10 bars (in excess or deficiency). The maximum permissible error of measuring C.N.G at the time of verification, re-verification sale and inspection shall not excess 2.5% (in excess of deficiency of the total quantity of gas delivered or sold".

Sd/=
MAHKUM DIN QADRI
SECRETARY TO GOVT. OF SINDH

NO. S.O(A-IV)1(148)005/BSP/W&M Karachi, dated the 16th December, 2006

A copy is forwarded for information and necessary Action to:

1. Principal Secretary to Government Sindh, Karachi.
2. Deputy Secretary (Staff) to Chief Secretary Sindh, Karachi.
3. P.S to Additional Chief Secretary _____ (All)
4. P.S to Senior Member, Board of Revenue.
5. P.S to Administration Secretary_____ (All)

6. The District Coordination Officer _____ (All)
7. The Director General, Agriculture Ext/AE&WM & Research, Hyderabad.
8. The Director, Agriculture Marketing, Hyderabad.
9. The President, Sindh Chamber Board, Hyderabad.
10. The Controller (W&MC)/D.G Ext. Hyderabad.
11. The Director, Information, Government of Sindh.
12. The Superintendent, Government Printing Press Sindh, Karachi, for publication of above notification and supply 25 copies, thereof to this Department.
13. P.A to Additional Secretary Admn/Tec, Agriculture Department, Karachi.
14. P.A to Deputy Secretary (Admn, Gen & Tech), Agriculture Department, Karachi.
15. The Deputy Director, Information, Government of Sindh.
16. The P.R.O, Agriculture Department, Karachi.
17. The Section Officer, Agriculture Department, Karachi _____ (All)

(ASHIQ HUSSAIN)
SECTION OFFICER (A-IV)

GOVERNMENT OF SINDH
SUPPLY & PRICES DEPARTMENT

NOTIFICATION

NO. S.O(GEN)/S&PD/W&M/(1)/2012: in exercise of the powers conferred by Section 47 of the Sindh Standard Weights and Measures (Enforcement) Act, 1975 The Government of Sindh are pleased to make the following amendments in the Sindh Standard Weights and Measures (Enforcement) Rules, 1976.

A M E N D M E N T

1. For Schedule VIII, the following shall be substituted:

Schedule – VIII
(See Rule – 11 (2)

For Manufacturers	Rs. 2,000.00 Per year
For Repairers	Rs. 1,000.00 Per year
For Dealers	Rs. 1,500.00 Per year

2. *In Schedule X*

Schedule – X
(See Rule 14)

For Serial No. 1, under the heading "Carat Weight" for the existing entries, the following shall be substituted';

CARAT WEIGHTS

0.5/100 gm to 50/100 gm	Rs. 10.00
Above 50/100	Rs. 20.00

For Serial No. 1, under the heading "Bullion Weight" for the existing entries, the following shall be substituted:

BULLION WEIGHTS

1 mg to 500 mg	Rs. 10.00
Above 500 mg upto 500 gms	Rs. 20.00
Above 500 gms upto 2 kg	Rs. 40.00
Above 2 kg	Rs. 60.00

For Serial No. 1, under the heading "Brass Weight" for the existing entries, the following shall be substituted:

BRASS WEIGHTS

1 gm upto 500 gms	Rs. 20.00
Above 500 gms upto 2 kg	Rs. 40.00

For Serial No. 1, under the heading "Sheet Metal Weight" for the existing entries, the following shall be substituted:

SHEET METAL WEIGHTS

1 mg upto 500 mg	Rs. 10.00

For Serial No. 1, under the heading "Iron Steel Weight" for the existing entries, the following shall be substituted:

IRON STEEL WEIGHTS

100 gm upto 500 gm	Rs. 10.00
Above 500 gm upto 2 kg	Rs. 20.00
Above 2 kg upto 10 kg	Rs. 40.00
Above 10 kg	Rs. 60.00

For serial No. 2, under the heading "Liquid Capacity" for the existing entries, the following shall be substituted:

LIQUID CAPACITY

1 ml upto 500 ml	Rs. 10.00
Above 500 ml upto 5 liters	Rs. 20.00
Above 5 liters upto 100 liters	Rs. 40.00
Above 100 liters	Rs. 40.00 for every 100 liters may be added

For Serial No. 3, under the heading "Length Measure" for the existing entries, the following shall be substituted:

LENGTH MEASURE

(a) "Cloth Measure"	
Below 1 meter	Rs. 20.00
From 1 meter and above	Rs. 50.00
(b) "Other than Cloth"	
Upto 5 meters	Rs. 100.00
Above 5 meters upto 10 meters	Rs. 100.00
Above 10 meters	Rs. 100.00

For Serial No. 7, under the heading "Fuel Lorries Including Motors" for the existing entries, the following shall be substituted:

FUEL LORRIES INCLUDING METERS

Upto 10,000 liters	Rs. 1,000.00
Above 10,000 liters to 20,000 liters	Rs. 1,500.00
Above 20,000 liters to 30,000 liters	Rs. 2,000.00
Above 30,000 liters to 40,000 liters	Rs. 3,000.00
Above 40,000 liters to 50,000 liters	Rs. 4,000.00
Above 50,000 liters	Rs. 5,000.00
Flow Meter	
Master Measure	
(a) Upto 1,000 Liters	Rs. 5,000.00
(b) Above 1,000 Liters	Rs. 10,000.00

For Serial No. 8, under the heading "Electronic Measures" for the existing entries, the following shall be substituted:

ELECTRONIC MEASURES

Upto 50 Kgs	
(a) Class ‘C’ & ‘D’	Rs. 250.00
(b) Class ‘A’ & ‘B’	Rs. 1,000.00
Above 50 kgs upto 5 M.T	Rs. 2,000.00
Above 5 M.T upto 40 M.T	Rs. 4,000.00
Above 40 M.T upto 80 M.T	Rs. 5,000.00
Above 80 M.T upto 100 M.T	Rs. 7,000.00
Above 100 M.T	Rs. 8,000.00

IQBAL AHSAN ZAIDI
SECRETARY TO GOVT. OF SINDH

NO. S.O(GEN)/S&PD/W&M/(1)/2002/747 Karachi dated the 19th March, 2012

A copy is forwarded to:

1. The Addition Chief Secretary (all), GOS, Karachi.
2. The Principal Secretary to Governor of Sindh, Karachi.
3. The Secretary to Government of Sindh (all).
4. The Commissioner (all) in Sindh.
5. The deputy Commissioners (all) in Sindh.
6. The deputy Secretary (Staff) to Chief Secretary Sindh, Karachi.
7. The additional Controller, W&M Wing, Supply & Prices Department, GOS, Karachi.
8. The Director, Bureau of Supply & Prices, Government of Sindh, Karachi.
9. The superintendent, Government Printing Press Sindh, Karachi for Publication Notification and supply 25 copy of thereof to this Department.
10. Office Order File.

(RASHID ALI MANGI)
SECTION OFFICER (GEN)

GOVERNMENT OF SINDH
SUPPLY & PRICES DEPARTMENT

NOTIFICATION

NO. S.O(GEN)/S&PD/W&M/(1)/2012: In exercise of the powers conferred by Section 47 of the Sindh Standard Weights & Measures (Enforcement) Act, 1975 the Government of Sindh is pleased to make the following amendments in the Sindh Standard Weights & Measures (Enforcement) Rules, 1976.

AMENDMENT

1. For Schedule X the following shall be substituted:

Schedule-X
(See rule-14)

For Serial No. 5, under the heading "WEIGHTING INSTRUMENTS OTHER THAN BEAMS SCALES OF CLASS 'C' for the existing entries, the following shall be substituted".

CAPACITY	
Each Scale not exceeding 500 g	Rs. 50.00
Above 500 g but no exceeding 5 kg	Rs. 75.00
Above 5 kg but not exceeding 20 kg	Rs. 100.00
Above 20 kg but not exceeding 50 kg	Rs. 150.00
Above 50 kg but not exceeding 200 kg	Rs. 200.00
Above 200 kg but not exceeding 500 kg	Rs. 300.00
Above 500 kg but not exceeding 1 ton kg	Rs. 500.00
Above 1 metric ton but not exceeding 2 metric ton	Rs. 750.00

For Serial No. 5, under the heading "Beam Scales of 'C' for the existing entries, the following shall be substituted".

DENOMINATIONS:	
Not exceeding 500g	Rs. 30.00
Above 500 g but no exceeding 5 kg	Rs. 50.00
Above 5 kg but not exceeding 20 kg	Rs. 75.00
Above 20 kg but not exceeding 50 kg	Rs. 100.00
Above 50 kg but not exceeding 200 kg	Rs. 150.00
Above 200 kg but not exceeding 500 kg	Rs. 200.00
Above 500 kg but not exceeding 1 ton kg	Rs. 250.00
Above 1 metric ton but not exceeding 2 metric ton	Rs. 300.00

For Serial No. 6, under the heading "WEIGHTING INSTRUMENTS PETROL OR FUEL PUMPS/CNG (DISPENSING UNITS) FUEL VEHICLES METERS OF FILLER for the existing entries, the following shall be substituted".

(a) Fuel Pumps	Rs. 1000.00
(b) CNG/LPG or any other fuel Dispensing Unit	Rs. 1000.00

IQBAL AHSAN ZAIDI
SECRETARY TO GOVT. OF SINDH

NO. S.O(GEN)/S&PD/W&M/(1)/2012/1371 Karachi dated the 15th May, 2013

A copy is forwarded to:

1. The Additional Chief Secretary Govt. of Sindh, Karachi.

2. The Principal Secretary to Governor of Sindh, Karachi.
3. The Secretary to Government of Sindh, Karachi (all)
4. The Commissioner Sindh, (all)
5. The Deputy Commissioner Sindh, (all)
6. The Deputy Secretary (Staff) to Chief Secretary Sindh, Karachi.
7. The Controller, Weights & Measures Wing, Govt. of Sindh, Karachi.
8. The Director, Bureau of Supply & Prices, Govt. of Sindh, Karachi.
9. The Superintendent, Government Printing Press Sindh, Karachi for Publication of above notification and Supply 25 copy of there of this Department.
10. Office Order File.

(KHALID HUSSAIN)
SECTION OFFICER (COORD)